CITY OF COLFAX

STATE OF CALIFORNIA

REQUEST FOR PROPOSALS

BACKUP DIESEL POWERED GENERATOR REPLACEMENT

April 2021 (Revision 1)

Proposals Due: 2:00 PM, May 13, 2021

Non Mandatory Site Walk: 10:00 AM, April 27, 2021
City Wastewater Treatment Plant
South end of Grand View Way, Colfax, CA

City Project No. 574
CAL OED ID#061-14498

Contents

1 INTRODUCTION & PROJECT SUMMARY 1
1.1 Project Description 1
1.2 Site information 1
2 SPECIFICATIONS 2
2.1 Engineer Generator Performance Specifications 2
2.2 Design 2
2.3 Generator Disposal 2
2.4 Temporary Generator at Lift Station 5 2
3 GENERAL REQUIREMENTS 2
3.1 Utility requirements 3
3.2 Qualifications (experience), insurance and bonding 3
3.3 Selection process, award process 3
3.4 Prevailing Wages and Federal Labor Standards 3
3.5 Worker's Compensation 4
3.6 CEQA/NEPA Summary 4
3.7 No Warranty by City 4
3.8 Confidentiality of Design and Pricing Information Prior to Award 4
3.9 Proposal Validity 5
3.10 Ownership, Copyright 5
3.11 City of Colfax Rights 5
3.12 Project management and meetings 6
3.13 Safety & Security 6
4 PROPOSAL 7
4.1 PROPOSAL SUBMITTAL: 7
4.2 FEE SCHEDULE FORM 8
5 TENTATIVE SCHEDULE: 11
6 SELECTION PROCESS: 11

FIGURES

1. Generator Locations and Site Walk Meeting Location

APPENDICES

A. Engine Generator Performance Specification
B. As-Built Drawing of the Generator Sites
C. City of Colfax Standard Construction Agreement

1 INTRODUCTION & PROJECT SUMMARY

The objective of this Request for Proposal (RFP) is to identify and select the lowest cost and most qualified Contractor for the purchase and installation of a five stationary backup diesel powered generators.

Contractors shall be California licensed and qualified to supply and integrate backup diesel powered generators at five locations throughout the City of Colfax (City), including its waste water treatment plant and four sewer lift stations. The site locations are illustrated in Figure 1, attached. The sites have existing generators installed around 2010 and the new generators will replace the existing generators. In general, this will be an in-kind replacement except where technology, regulations or other conditions dictate. The successful contractor shall comply with the requirements, general conditions and specification stated in this request for proposal (RFP).

1.1 Project Description

The City of Colfax is located in Placer County serving a community of approximately 2000 residents. The location and City limit are provided in Figure 1. Figure 1 also shows the location of the generator sites.

The City has funding through a California Office of Emergency Services (CalOES) grant to purchase and install/replace generators at its wastewater treatment plant and five sewer lift stations.

The City of Colfax proposes to replace its existing five generators with newly manufactured units that meet the power demands from the facilities they will be serving and in compliance with federal air quality regulations for stationary emergency power generation. The minimum specifications for the generators are enumerated in the "Engine Generator Performance Specifications" included in Appendix A.

The work will further include removal of the existing generators to a site designated by the City but within or near the city limits. At the option of the City, the work may also include those bid items listed in the Fee Schedule.

1.2 Site information

It is expected that the new generators will utilize the same foundations and conduits as the existing generators that they are replacing. It is the responsibility of the bidding contractor to assess the sites to determine if modifications are needed. All modification shall be designed and construction of the Contractor and the price of such work included in the various bid items in their proposal.

A non-mandatory pre-proposal site walk is scheduled for ~~April 13, 2021~~ April 27, 2021. The site walk will start at the City's wastewater treatment plant as indicated in Figure 1. Bidders may make one follow-up visit with 48 hours advanced notification and scheduled with City staff. A request to visit the site shall be made to **Jim Fletter, Project Manager, at jfletter@woodrodgers.com**.

2 SPECIFICATIONS

2.1 Engineer Generator Performance Specifications

All proposed generators shall be the minimum requirements in the "ENGINE GENERATOR PERFORMANCE SPECIFICATION" attached to this RFP as Appendix A.

2.2 Design

Any modifications to the sites require to install functioning generators shall be designed by qualified and California licensed engineers for the discipline that the modification involve.

2.3 Generator Disposal

Disposal of any generator shall be performed in a safe and legal manner to protect the City and the environment.

2.4 Temporary Generator at Lift Station 5

During the time period where the generator at Lift Station 5 is non-operational, the Contractor will provide a temporary generator to operate the lift station to ensure continuous operation of the pump station in the case of a utility outage. The generator fuel supply shall be sized to operate one pump for a minimum period of 24 hours. During temporary generator operation, the Contractor will ensure the tank is refilled as needed to maintain continuous operation. The City will reimburse the Contractor for all fuel costs from fueling receipts.

3 GENERAL REQUIREMENTS

The generators shall be warrantied for minimum of 5 years.

All work shall be in accordance with latest National Electric Code, State and Local Codes.

The Contractor shall submit complete Electrical, Civil and Structural drawings for any necessary modifications to the facilities. All plans shall be stamped and signed by California licensed engineers in the field in which a particular design element applies. This may include but may not be limited to electrical engineering, civil engineering and structural engineering.

The Contractor shall submit shop drawings for the equipment and components for review and comment as well as manuals and record drawings for all work provided under this contract for City use.

The Contract shall reuse or replace all conductor between the existing transfer switches, control cabinets and the generator as needed. It is the responsibility of the Contractor to determine whether conductor can be safely reused prior to bidding and the cost for replacing conductors shall be included in the bid.

Contract to obtain a City of Colfax Business License prior to beginning any work.

Design services, as needed, shall be performed by qualified Engineers and other professionals selected and employed or subcontracted by the Contractor. The professional obligations of such persons shall be undertaken and performed in the interest of the

Contractor. Construction services shall be performed by qualified construction contractors and suppliers, selected and paid by the Contractor and acting in the interest of the Contractor. Nothing contained herein shall create any contractual relationship between the City and subcontractors, Architects, Engineers and/or suppliers of the Prime Contractor.

The Contractor shall provide all labor, supervision, materials, tools, equipment, transportation; pads and structures (as needed), ground system, underground electrical work, hoisting, rigging, project management, insurance, etc. for all work described herein specified and or required to complete the project to the satisfaction of the City.

The Contractor shall submit a Schedule of Values after project award but prior to notice to proceed. The Schedule of Values shall include payment schedule based upon actual milestones, not calendar dates. Final payment shall not be issued prior to full Permission To Operate (PTO) issued by any authorizing agencies such as PG&E, if applicable. Conditional PTO will not be considered an acceptable milestone.

3.1 Utility requirements

Ensure the design meets local utility interconnection requirements, if applicable. The application process has been started with PG&E by the Contractor on behalf of the City. This responsibility includes, but may not be limited to, submitting the design to the utility company and securing approval per the utility company's interconnection requirements.

The Contractor shall copy and keep the City informed at all times on all communication with the utility. The City maintains the right to take the interconnection application back under its control at any time.

3.2 Qualifications (experience), insurance and bonding

All Bidders shall be Contractors in the state of California with ~~both a General and~~ C-10 Electrical license~~s~~. All Bidders shall provide evidence of ten years of experience in the industry providing similar sized systems. All Bidders shall provide at least three projects with references and contact information.

Contractor shall provide and maintain insurance and endorsement as identified in the City contract provided in Appendix D.

Contractor shall bond for the entire work based upon the final cost of the work including.

Performance or labor bonds are NOT required.

3.3 Selection process, award process

The project will be awarded based upon price and proposal. The Project will be awarded to the selected Contractor based on a best value evaluation pursuant to California Public Contract Code Section 22614 and in compliance with State regulations.

The City reserves the right to reject all proposals for any reason.

3.4 Prevailing Wages and Federal Labor Standards

The successful proposer who is awarded this project will be required to comply with all applicable provisions of the State labor codes, including all prevailing wage requirements of State of California Department of Industrial Relations. Contractor is required to pay the prevailing wage rate as determined by the Labor Statistics and Research Division of the

California State Department of Industrial Relations. The Contractor's duty to pay State prevailing wages can be found under Labor Code Section 1770 et seq. and Labor Code Sections 1775 and 1777.7 outline the penalties for failure to pay prevailing wages and employ apprentices including forfeitures and debarment.

In accordance with Labor Code Section 1770 et seq., the Project is a "public work". The successful Contractor and any Subcontractors shall pay wages in accordance with the determination of the Director of the Department of Industrial Relations ("DIR") regarding the prevailing rate of per diem wages. Copies of those rates are on file with the Director of Public Works, and are available to any interested party upon request. The Contractor shall post a copy of the DIR's determination of the prevailing rate of per diem wages at the job site. This Project is subject to compliance monitoring and enforcement by the DIR. The Awarded Contractor shall maintain all records in accordance with Federal and State requirements and shall cooperate with the City's labor compliance monitoring consultant to the fullest extent possible.

3.5 Worker's Compensation

Section 1861 of the California Labor Code requires each contractor that is awarded a public works contract to sign and file with the awarding body the following certification prior to performing the work of the contract: "I am aware of the provisions of Section 3700 of the Labor Code which require every employer to be insured against liability for worker's compensation or to undertake self-insurance in accordance with the provisions of that code, and I will comply with such provisions before commencing the performance of the work of this contract."

3.6 CEQA/NEPA Summary

The City will be responsible for the California Environmental Quality Act (CEQA) process, study, and determination. Contractor shall coordinate with City staff to ensure consistency between project plans and the CEQA project description, and also to ensure any project design features or mitigation measures (if needed) are feasible and incorporated into the design plans. At this time, the City anticipates the project have some mitigation measure but will make the final determination at the time design plans are prepared.

3.7 No Warranty by City

Proposers are solely responsible to satisfy themselves as to the suitability of any estimates, projections, budgets, design concepts, technical criteria, reports, surveys, test data and other information provided to, or reviewed by, them relating to the Project, Site or Existing Improvements and nothing stated therein, in the RFP Documents or in any other information provided by the City shall be construed as implying the creation or existence of any warranty, express or implied, on the part of the City with respect to the completeness, accuracy or sufficiency thereof.

3.8 Confidentiality of Design and Pricing Information Prior to Award

It is understood that all responses sent to the City are sent as confidential documents. City shall make reasonable efforts, consistent with applicable laws, to refrain from disclosing to competing proposers prior to Award, the content of any information on design, prices or pricing that is contained in another proposer's Proposal. No part of the responses will be made public or shown to any persons outside of the City and its Review Committee until

after a decision has been made by City staff on who to recommend for award to the City Council and a contract has been executed by the proposer, at which time all documents will be public record, per applicable law.

3.9 Proposal Validity

The offer represented by each proposer's Proposal will remain in full force and effect for ninety (90) days after the Proposal Due Date. If award has not been made within ninety (90) days after the Proposal Due Date, each proposer that has not previously agreed to an extension of such deadline shall have the right to withdraw its Proposal.

3.10 Ownership, Copyright

Drawings, renderings, models, building designs, design approaches, design details, construction techniques, procedures, means and methods and other technical design and construction information contained within a Proposal, or any other documents submitted by proposer to City, shall be deemed the sole and exclusive property of the City, all copyrights thereto shall be deemed assigned to and held by the City, and the proposer shall retain no property, copyright or other proprietary rights with respect thereto; provided, however, that: (1) nothing herein shall be interpreted as prohibiting or limiting the right of any proposer that does not receive Award of the Agreement to copy, use or incorporate such technical design information contained within its own Proposal for its own use in the conduct of its business trade or profession; and (2) with respect to the proposer who receives Award of the Agreement, such proposer's rights and obligations with respect to copying, use or incorporation of such technical design information in any projects or work other than the Project shall be governed by the terms of the Agreement and General Conditions.

3.11 City of Colfax Rights

The City reserves the right to waive minor irregularities and omissions in the information contained in the Proposal submitted, and to make all final determinations. The City reserves the right to decide not to award an agreement as a result of the RFP or cancel the RFP process. The City shall not be obligated to respond to any Proposal submitted, nor be legally bound in any manner by the submission of the Proposal. The City reserves the right to negotiate Project deliverables and associated costs.

The City reserves the right to request Proposal revisions.

The issuance of an RFP constitutes only an invitation. The City reserves the right to determine, in its sole discretion, whether any aspect of the Proposal satisfactorily meets the criteria established in the RFP and the right to seek clarification from any proposer submitting Proposals. The City also reserves the right to reject any or all Proposals received as a result of this solicitation; to extent the Proposal due date for RFP's; to modify, amend, reissue or rewrite this RFP document; and to procure services by other means. In the event the RFP is withdrawn by the City prior to the receipt of RFP Proposals, or if the City does not proceed for any reason, the City shall have no liability to any proposer for any costs or expenses incurred, in connection with the preparation and submittal of a response to this RFP

3.12 Project management and meetings

Due to the nature of the project pre-scheduled construction meetings are not anticipated. However, the City reserves the right to require period meeting as it's discretion.

The awarded Contractor shall prepare a construction schedule. The schedule shall be revised monthly with a copy thereof to be submitted with each Project Application for Payment. In addition to the monthly update, the schedules shall also be revised at appropriate intervals as required by the conditions of the Work and Project with a copy submitted to the City

3.13 Safety & Security

The Contractor shall be responsible for securing the sites and related construction and equipment staged at each site. All equipment or materials not able to be staged near the site areas shall remain off-site and in a Contractor controlled facility that is not owned or controlled by the City.

4 PROPOSAL

4.1 PROPOSAL SUBMITTAL:

Three (3) copies of the following information shall be submitted with the bid. The following format is required to allow easier comparison of proposals. Additional information, in the form of brochures, etc., may be submitted as appendices. Return of any material, if desired, must be arranged by the Contractor at their expense. If this is a joint proposal between multiple firms, items 2 and 3 shall include the required information for all firms involved in the proposal.

1. Date.
2. Legal name of contractor or subcontractor, address, telephone number, email address and the year firm was established.
3. Identify who would be the principal in charge of the project, and who would be the City's project contact.
4. Give a representative listing of projects completed in the past five years, with a special emphasis on work of this type for a public agency. If more than one firm is involved in this proposal, specify which firm was involved in the representative project.
5. Provide a list of references, with contact persons and phone numbers from agencies/private companies for whom your firm has provided similar services.
6. List any other information that might aid in ascertaining your firm's qualifications.
7. A copy of the City's standard Consultant Services Agreement is provided in Appendix C. Provide a summary of changes to the standard language, which will be requested by the firm if selected. Do not fill out the forms.

Fill in and attach the following Fee Schedule Form.

Mail or deliver the above information and the Fee Schedule to

Sealed proposals from interested contractors must be submitted

by 2:00 PM on May 13 2021 to and with the following information:

City of Colfax

ATTN: CITY CLERK

33 S Main Street

Colfax, CA 95713

GENERATOR REPLACEMENT – DO NOT OPEN

4.2 FEE SCHEDULE FORM

A. BASIS OF BID

The undersigned declares that he/she has examined the location of the proposed work, that he/she has examined these contract documents, and hereby proposes to furnish all materials, labor, equipment, and perform all work in strict accordance with the said contract documents, for the following unit price:

ITEM	DESCRIPTION	UNIT	QTY	AMOUNT
1	Supply Generators	LS	1	
2	Remove Existing Generators	LS	1	
3	Install, Test, Startup and Warrantee Generators	LS	1	
A. Total Cost (Basis of Bid)				

This basis of bid shall be used to compare cost between all proposals. The work for these items shall include, but may not be limited to, all submittals, equipment, labor, parts, installation, wiring, testing, commissioning, bonding, and warrantees to provide the City with backup diesel powered generators in conformance with specifications and that are fully operational for the facilities they will serve. Bid Item 2, removal of existing generators, shall include cost to relocate the existing generators to City designated site within five miles of the city limits. Removal shall also include transfer of all fuel to temporary storage tanks and then utilizing that fuel for the new generator. All generators removed and stored shall be drained of all fluids and safely conditioned for long term storage in the outdoor environment for which they will be subjected.

Work shall further include any necessary traffic control to safely execute the work and a temporary generator at Lift Station 5.

The cost to fuel the temporary generator shall not be included in these bid items. The City will reimburse the Contractor based on provided fueling receipts.

B. OPTIONAL ADDITIVE BID ITEMS

The Contractor shall provide cost for the following bid items. The City reserves the right to accept or reject in whole or in parts each additive bid item at its discretion with no penalty to the City.

ITEM	DESCRIPTION	UNIT	QTY	AMOUNT
4	Contract to Own and Repurpose Existing Generators	LS	1	
5	Trailer Mount the Existing Lift Station 5 Generator	LS	1	
6	Supply New Trailer Mounted Generator	LS	1	
7	Install Portable Generator Transfer Switch and Plug at Lift Stations 1, 2 & 3	LS	1	
8	Install Portable Generator Transfer Switch and Plug at Lift Station 5	LS	1	
9	Five Year Parts and Service Plan	LS	1	
10	Obtain Air Quality Permit for generators in Bid Schedule A (Basis of Bid)			
11	Obtain Air Quality Permit for portable generator in Bid Schedule B Item 7 or 8			

Bid Item 4 shall include credit to City for Contractor not having to remove the existing generators to a City designated site but and all cost or credit for the Contractor to ownership of the generators, haul them to a Contractor control site for disposal or repurposing. The generators shall be disposed or repurposed in a legal, environmental safe manner. An amount written with no indication as negative or parentheses shall be deemed a cost to the City. A number written with a negative sign in front or in parentheses shall be deemed as a credit to the City reducing the overall cost of the project if this line item is accepted by the City.

Bid Item 5 shall include the cost to mount the City's existing generator at Lift Station 5 on a trailer with a sound enclosure and fuel supply. The cost shall include but may not be limited to modifying the generator as necessary to recertify the generator at the tier required for this application, necessary adjustments for the cost/credit due to removal of this generator from Bid Items 2 and 4, delivery, testing and commissioning of the generator at all four lift station sites.

Bid Item 6 shall include the cost to purchase a new portable generator of the same size as the stationary generator purchased for Lift Station 5 in Bid Item 1. The cost shall include,

but may not be limited to, submittals, delivery, testing and commissioning of the generator at all four lift station sites.

Bid Item 7 & 8 shall include design and installation of a transfer switch and plug for a portable generator connection at each of four sewer lift stations. The Contractor shall work with the City representative to locate and design the transfer switch and plug to the latest NEC codes for the purpose of connecting a portable generator to operating each lift station if a stationary generator is not operating. Cost for this bid item shall include but may not be limited to design, plan submittal and revisions, labor, parts and equipment, tools, testing and commissioning to provide the City with a complete working system.

Bid Item 9 shall include cost to provide scheduled maintenance of the five stationary generators for a period of five years as recommended by the manufacturer for this application.

Bid Item 10 & 11 shall include cost to obtain the necessary air quality permits from the relevant County, State or Federal agency on behalf of the City. Contractor shall provide all labor to coordinate with the agency(s). Permit fee cost shall not be included in this bid item. The City will pay all the costs due to the relevant agency(s) for the permits.

Project completion: The Contractor shall commence work within ten (10) days of the Notice to Proceed (NTP), and diligently prosecute the work to completion.

Contractor's License Number: _____

Contractor's License Classification: _____

IN WITNESS WHEREOF, the undersigned has caused this Bid to be properly executed, as of the date set forth below:

Dated this_____ day of _____ 2021.

Contractor Name: _____

By: _____

TITLE: _____

Contractors Address:_____

Telephone Number:_____

5 TENTATIVE SCHEDULE:

While the successful Consultant will be required to prepare a project schedule, the following are tentative dates through contract execution

Description of Task	Dates
Requests for Proposals sent to Contractor and Publicly Advertised	4/6/2021
Non-mandatory site walk	~~4/13/2021~~ 4/27/2021
Deadline to submit proposals	~~4/22/2021~~ 5/13/2021
Final selection of Contractor	~~4/26/2021~~ 5/17/2021
Council Award	~~5/12/2021~~ 5/26/2021

6 SELECTION PROCESS:

The selection process will consist of the following:

1. City staff and City representatives will review and evaluate the submitted proposals and make a final selection based on compliance of the proposed equipment with the specifications, qualifications of prime contractor and sub-consultants, and the bid form costs.
2. Selection of highest rated Contractors will be based upon order of preference and the cost proposals.
3. The City will interview the highest rated Contractor at its discretion.
4. After negotiation of a mutually satisfactory agreement, the final selection will be submitted to the City Council with a recommendation for award of a contract. A copy of a "Sample" contract is provided in Appendix C.

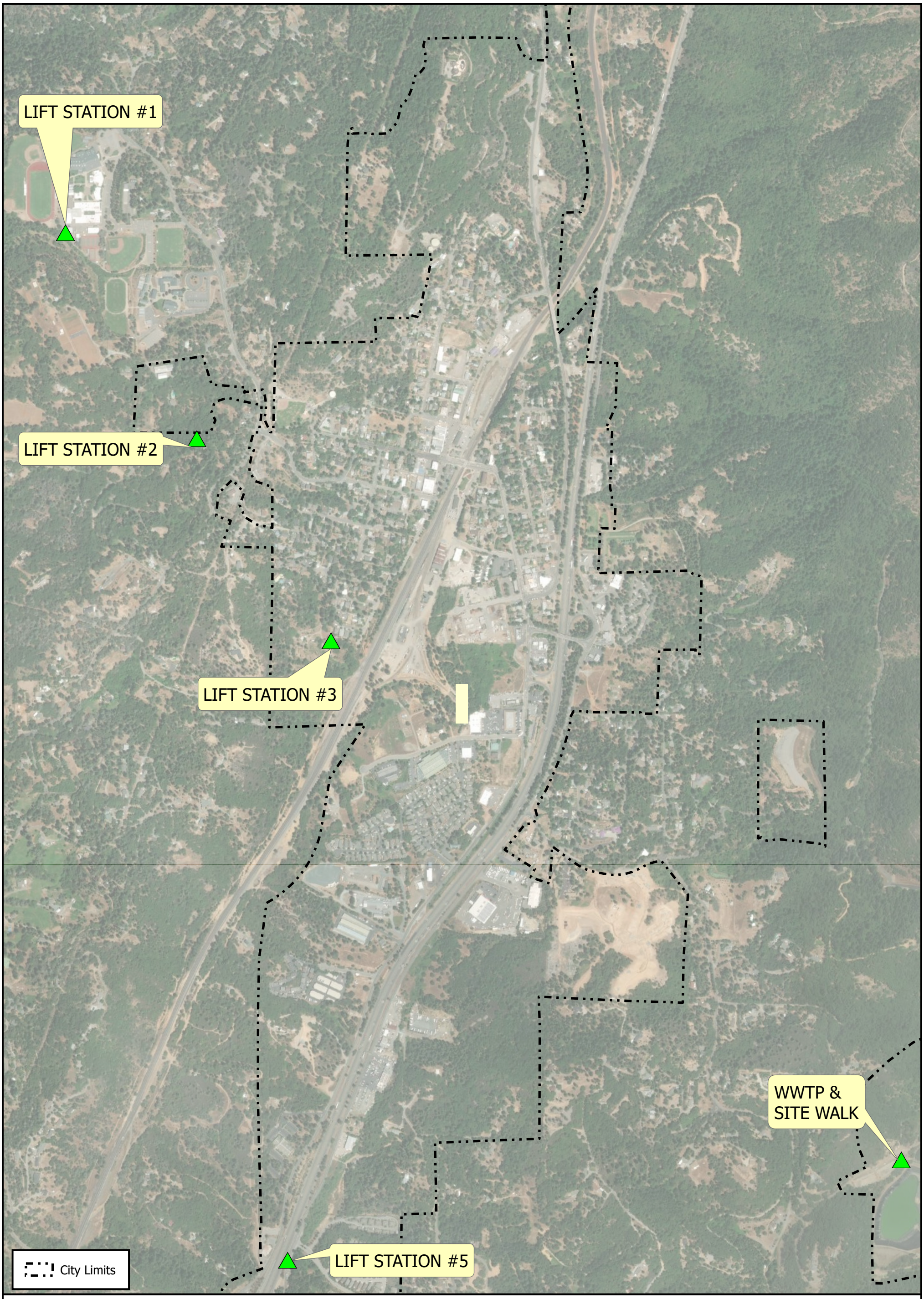

FIGURE 1

GENERATOR & SITE WALK MEETING LOCATION

GENERATOR REPLACEMENT PROJECT

CITY OF COLFAX, CA

APRIL 2021

0 250 500 1,000

Feet

NORTH

WOOD RODGERS

J:\Jobs\8646_Colfax_Cityof\8646005 Generator Replacement\GIS\Planning\RFP.aprx 4/1/2021 5:32 PM jfletter

APPENDIX A

ENGINE GENERATOR PERFORMANCE SPECIFICATION

ENGINE GENERATOR PERFORMANCE SPECIFICATION

1. **General**
   1.1. **Description of System & Site**
      1.1.1. Provide a standby power system to supply electrical power at 480 Volts, 60 Hertz, 3 Phase (**genset**). The system will utilize generators rated kW. (80 / 80/ 130/ 175/ 300 minimum). The generator shall consist of a liquid cooled diesel engine, a synchronous AC alternator, and system controls with all necessary accessories for a complete operating system, including but not limited to the items as specified hereinafter.
      1.1.2. The site is an NEC ordinary location with no specific harsh environment requirements.The genset shall be applied at the listed ambient and elevation. Bidders to submit the generators rated power output at 110 degree ambient (˚F) and 2500 elevation (Ft). Colfax, CA.Bidders are to submit the genset's sound level in dBA at 23 ft based on the configuration specified.
   1.2. **Requirements of Regulatory Agencies**
      1.2.1. An electric generating system, consisting of a prime mover, generator, governor, coupling and all controls, must have been tested, as a complete unit, on a representative engineering prototype model of the equipment to be sold.
      1.2.2. The generator set must conform to applicable NFPA requirements.
      1.2.3. The generator set must include a listing for the UL2200 standard for stationary engine generator assembly.
      1.2.4. The generator set must meet EPA federal emission guidelines for stationary emergency power generation.
   1.3. **Manufacturer Qualifications**
      1.3.1. This system shall be supplied by an original equipment manufacturer (OEM) who has been regularly engaged in the production of engine-alternator sets, automatic transfer switches, and associated controls for a minimum of 25 years, thereby identifying one source of supply and responsibility. Approved suppliers are Generac Industrial Power or an approved equal.
      1.3.2. The manufacturer shall have printed literature and brochures describing the standard series specified, not a one of a kind fabrication.
      1.3.3. Manufacturer's authorized service representative shall meet the following criteria:
         1.3.3.1. Certified, factory trained, industrial generator technicians
         1.3.3.2. Service support 24/7
         1.3.3.3. Service location within 200 miles
         1.3.3.4. Response time of 4 hours
         1.3.3.5. Service & repair parts in-stock at performance level of 95%
   1.4. **Submittals**
      1.4.1. Engine Generator specification sheet
      1.4.2. Controls specification sheet(s)
      1.4.3. Installation / Layout dimensional drawing
      1.4.4. Wiring schematic
      1.4.5. Sound data
      1.4.6. Emission certification
      1.4.7. Warranty statementGenerator sizing calculations**Engine**
   2.1. **Engine Rating and Performance**
      2.1.1. The prime mover shall be a liquid cooled, diesel fueled, turbocharged after-cooled engine of 4-cycle design. It will have adequate horsepower to achieve rated kW output with at an operating speed of 1800 RPM.The engine shall support a 100% load step and design to start large motors across the line.
      2.1.3. The generator system shall support generator start-up and load transfer within 10 seconds.
   2.2. **Engine Oil System**
      2.2.1. Full pressure lubrication shall be supplied by a positive displacement lube oil pump. The engine shall have a replaceable oil filter(s) with internal bypass and replaceable element(s).
      2.2.2. The engine shall operate on mineral based oil. Synthetic oils shall not be required.
      2.2.3. The oil shall be cooled by an oil cooler which is integrated into the engine system.
   2.3. **Engine Cooling System**
      2.3.1. The engine is to be cooled with a unit mounted radiator, fan, water pump, and closed coolant recovery system. The coolant system shall include a coolant fill box which will provide visual means to determine if the system has adequate coolant level. The radiator shall be designed for operation in 122 degrees F, (50 degrees C) ambient temperature.
      2.3.2. The engine shall have (a) unit mounted, thermostatically controlled water jacket heater(s) to aid in quick starting. The wattage shall be as recommended by the manufacturer.

2.3.3. Engine coolant and oil drain extensions, equipped with pipe plugs and shut-off valves, must be provided to the outside of the mounting base for cleaner and more convenient engine servicing.

2.3.4. A radiator fan guard must be installed for personnel safety that meets UL and OSHA safety requirements.

2.3.5. Provide coolant heater.

2.4. **Engine Starting System**

2.4.1. Starting shall be by a solenoid shift, DC starting system.

2.4.2. The engine's cranking batteries shall be lead acid. The batteries shall be sized per the manufacturer's recommendations. The batteries supplied shall meet NFPA 110 cranking requirements of 90 seconds of total crank time. Battery specifications (type, amp-hour rating, cold cranking amps) to be provided in the submittal.

2.4.3. The genset shall have an engine driven, battery charging alternator with integrated voltage regulation.

2.4.4. The genset shall have an automatic dual rate, float equalize, 10 amp battery charger. The charger must be protected against a reverse polarity connection. The chargers charging current shall be monitored within the generator controller to support remote monitoring and diagnostics. The battery charger is to be factory installed on the generator set. Due to line voltage drop concerns, a battery charger mounted in the transfer switch will be unacceptable.**Engine Fuel System**

2.5.1. The engine fuel system shall be designed for operation on #2 diesel fuel and cold weather diesel blends.

2.5.2. The engine shall include a primary fuel filter, water separator, manual fuel priming pump, and engine flexible fuel lines must be installed at the point of manufacture. Element shall be replaceable paper type.

2.5.3. The engines suction line shall be fitted with a check valve to secure prime for the engines injection pump.**Engine Controls**

2.6.1. Engines that are equipped with an electronic engine control module (ECM), shall monitor and control engine functionality and seamlessly integrate with the genset controller through digital communications. ECM monitored parameters shall be integrated into the genset controllers NFPA 110 alarm and warning requirements. All ECM fault codes shall be displayed at the genset controller in standard language – fault code numbers are not acceptable.

2.6.2. For engines without ECM functionality or for any additional genset controller monitoring, sensors are to be conditioned to a 4-20ma signal level to enhance noise immunity and all sensor connections shall be sealed to prevent corrosion.

2.6.3. Engine speed shall be controlled with an integrated isochronous governor function with no change in alternator frequency from no load to full load. Steady state regulation is to be 0.25%.

2.7. **Engine Exhaust & Intake**

2.7.1. The engine exhaust emissions shall meet the EPA emission requirements for standby power generation.

2.7.2. The manufacturer shall supply its recommended stainless steel, flexible connector to couple the engine exhaust manifold to the exhaust system. A rain cap will terminate the exhaust pipe after the silencer. All components must be properly sized to assure operation without excessive back pressure when installed.

2.7.3. The manufacturer shall supply a critical grade exhaust silencer as standard. For applications with site specific sound requirements (reference section 1.1), the silencer shall be selected to achieve site sound levels.

2.7.4. For gensets in a weather or sound attenuated enclosure, all exhaust piping from the turbo-charger discharge to the silencer shall be thermally wrapped to minimize heat dissipation inside the enclosure.

2.7.5. The engine intake air is to be filtered with engine mounted, replaceable, dry element filters.

2.7.6. Lift Station 5 generator is within a building. Modify the existing exhaust system as needed.

3. Alternator

3.1. The alternator shall be the voltage and phase configuration as specified in section 1.1.1.

3.2. The alternator shall be a 4-pole, revolving field, stationary armature, synchronous machine. The excitation system shall utilize a brushless exciter with a three phase full wave rectifier assembly protected against abnormal transient conditions by a surge protector. Photo-sensitive components will not be permitted in the rotating exciter.The alternator shall include a permanent magnet generator (PMG) for excitation support. The system shall supply a minimum short circuit support current of 300% of the rating for 10 seconds.

3.4. The alternator shall support a maximum voltage dip of 15%.

3.5. Three phase alternators shall be 12 lead, broad range capable of supporting voltage reconnection. Single phase alternators shall be four lead and dedicated voltage designs (600v) shall be six lead. All leads must be extended into a NEMA 1 connection box for easy termination. A fully rated, isolated neutral connection must be included by the generator set manufacturer.The alternator shall use a single, sealed bearing design. The rotor shall be connected to the engine flywheel using flexible drive disks. The stator shall be direct connected to the engine to ensure permanent alignment.The alternator shall meet temperature rise standards of UL2200 (120 degrees C). The insulation system material shall be class "H" capable of withstanding 150 degrees C temperature rise.The alternator shall be protected against overloads and short circuit conditions by advanced control panel protective functions. The control panel is to provide a time current algorithm that protects the

alternator against short circuits. To ensure precision protection and repeatable trip characteristics, these functions must be implemented electronically in the generator control panel -- thermal magnetic breaker implementation are not acceptable.

4. Controls

4.1. The generator control system shall be a fully integrated microprocessor based control system for standby emergency engine generators meeting all requirements of NFPA 110 level 1.

4.2. The generator control system shall be a fully integrated control system enabling remote diagnostics and easy building management integration of all generator functions. The generator controller shall provide integrated and digital control over all generator functions including: bi-fuel control, engine protection, alternator protection, speed governing, voltage regulation and all related generator operations. The generator controller must also provide seamless digital integration with the engine's electronic engine control module (ECM) if so equipped. Generator controller's that utilize separate voltage regulators and speed governors or do not provide seamless integration with the engine management system are considered less desirable.

4.3. Communications shall be supported with building automation via the Modbus protocol without network cards. Optional internet and intranet connectivity shall be available.

4.4. The control system shall provide an environmentally sealed design including encapsulated circuit boards and sealed automotive style plugs for all sensors and circuit board connections. The use of non-encapsulated boards, edge cards, and pc ribbon cable connections are considered unacceptable.

4.5. Circuit boards shall utilize surface mount technology to provide vibration durability. Circuit boards that utilize large capacitors or heat sinks must utilize encapsulation methods to securely support these components.Diagnostic capabilities should include time-stamped event and alarm logs, ability to capture operational parameters during events, simultaneous monitoring of all input or output parameters, callout capabilities, support for multi-channel digital strip chart functionality and data logging capabilities.In addition to standard NFPA 110 alarms, the application loads should also be protected through instantaneous and steady state protective settings on system voltage, frequency, and power levels.

4.8. The control system shall provide pre-wired customer use I/O: 4 relay outputs (user definable functions), communications support via RS232 and RS485.

4.9. Customer I/O shall be software configurable providing full access to all alarm, event, data logging, and shutdown functionality. In addition, custom ladder logic functionality inside the generator controller shall be supported to provide application support flexibility. The ladder logic function shall have access to all the controller inputs and customer assignable outputs.

4.10. The control panel will display all user pertinent unit parameters including: engine and alternator operating conditions; oil pressure and optional oil temperature; coolant temperature and level alarm; fuel level (where applicable); engine speed; DC battery voltage; run time hours; generator voltages, amps, frequency, kilowatts, and power factor; alarm status and current alarm(s) condition per NFPA 110 level 1.

5. Engine / Alternator Packaging

5.1. The engine/alternator shall be isolated from the generator frame with rubber isolators. The packaging shall not require the addition of external spring isolators. A mainline, thermal magnetic circuit breaker carrying the UL mark shall be factory installed. The breaker shall be rated between 100 to 125% of the rated ampacity of the genset. The line side connections are to be made at the factory. Output lugs shall be provided for load side connections. The generator shall include a unit mounted auxiliary power load center. All ancillary AC devices (block heater, battery charger, alternator strip heater, etc) shall have a dedicated breaker within the load center.

6. Enclosure

6.1. The genset shall be packaged with a sound attenuating enclosures for the Lifts Stations 1, 2 and 3. Lift Station 5 is within a sound attenuating building and does not require an enclosure. The wastewater treatment plant generator shall be Level 1.

6.2. The enclosure shall be made of steel with a minimum thickness of 16 gauge. The enclosure is to have hinged, removable doors to allow access to the engine, alternator and control panel. The hinges shall allow for door fit adjustment. Hinges and all exposed fasteners will be stainless steel or Sermagard coated. The use of pop-rivets weakens the paint system and not allowed on external painted surfaces. Each door will have lockable hardware with identical keys. One will unlock at five generator doors.

6.3. The enclosure shall be coated with electrostatic applied powder paint, baked and finished to manufacturer's specifications. The color will be manufacturer's standard. The enclosure shall utilize an upward discharging radiator hood. Due to concerns relative to radiator damage, circulating exhaust, and prevailing winds, equipment without a radiator discharge hood will not be acceptable.

6.5. The genset silencer shall be mounted on the discharge hood of the enclosure. Due to architectural concerns, silencers mounted on the top of the generator enclosure are not acceptable. Gensets with silencers mounted inside the main generator compartment are acceptable only if the silencer is thermally wrapped to minimize heat stress on the surrounding components.

7. Sub-base fuel tank

7.1. The packaging shall include a double wall, sub-base mounted, UL142 listed fuel tank. The tank shall be sized to provide 48 hours of run time based on the following demand.
   7.1.1. Wastewater Treatment Plant: 100%
   7.1.2. Lift Stations 1, 2, 3 & 5: 50%
7.2. The tank shall include fuel suction and return connections, normal and emergency vents, secondary containment emergency vent and rupture basin sensor, mechanical fuel level indication and a stub-up area convenient for electrical conduit entry.
7.3. The fuel tank shall use an electric fuel sensor to provide an analog indication of fuel level. The controller shall have a warning indication on low fuel level and provide optional shutdown functionality for low, low fuel level.
7.4. The fuel tank must be supplied by the engine-generator set manufacturer and be installed before shipment.
7.5. The fuel tank fill port for each genset shall be located for ease of access. Where the genset is within a building, the fill port shall be connected to the existing fill access hatch.

8. Loose Items

8.1. Supplier to itemize loose parts that require site mounting and installation. Preference will be shown for gensets that factory mount items like mufflers, battery chargers, etc.

9. Additional project requirements

9.1. **Factory testing**
   9.1.1. Before shipment of the equipment, the engine-generator set shall be tested under rated load for performance and proper functioning of control and interfacing circuits. Tests shall include:
      9.1.1.1. Verify voltage & frequency stability.
      9.1.1.2. Verify transient voltage & frequency dip response.
      9.1.1.3. Load test the generator for 30 minutes

9.2. **Manuals**
   9.2.1. Three (3) sets of owner's manuals specific to the product supplied must accompany delivery of the equipment. General operating instruction, preventive maintenance, wiring diagrams, schematics and parts exploded views specific to this model must be included.

9.3. **Installation**
   9.3.1. Contractor shall install the complete electrical generating system including all external fuel connections in accordance with requirements of NEC, NFPA, and the manufacturer's recommendations as reviewed by the Engineer.

9.4. **Service**
   9.4.1. Supplier of the genset and associated items shall have permanent service facilities in this trade area. These facilities shall comprise a permanent force of factory trained service personnel on 24-hour call, experienced in servicing this type of equipment, providing warranty and routine maintenance service to afford the owner maximum protection. Delegation of this service responsibility for any of the equipment listed herein will not be considered fulfillment of these specifications. Service contracts shall also be available.

9.5. **Warranty**
   9.5.1. The standby electric generating system components, complete genset and instrumentation panel shall be warranted by the manufacturer against defective materials and factory workmanship for a period of Five (5) years. Such defective parts shall be repaired or replaced at the manufacturer's option, free of charge for parts, labor and travel.
   9.5.2. The warranty period shall commence when the standby power system is first placed into service. Multiple warranties for individual components (engine, alternator, controls, etc.) will not be acceptable. Satisfactory warranty documents must be provided with the manuals
   9.5.3. The manufacturer supplying the warranty for the complete system must have the necessary financial strength and technical expertise with all components supplied to provide adequate warranty support. Documentation supporting this requirement shall be furnished upon request by the purchasing agency.

9.6. **Startup and Commissioning**
   9.6.1. The supplier of the electric generating plant and associated items covered herein shall provide factory trained technicians to validate the completed installation and to perform an initial startup inspection to include:
      9.6.1.1. Ensuring the engine starts (both hot and cold) within the specified time.
      9.6.1.2. Verification of engine parameters within specification.
      9.6.1.3. Verify no load frequency and voltage, adjusting if required.
      9.6.1.4. Test all automatic shutdowns of the engine-generator.
      9.6.1.5. Perform a load test of the electric plant, ensuring full load frequency and voltage are within specification by using building load.
      9.6.1.6. Using a load bank, load the generator at 30% for 30 minutes, 50 % for 30 minutes, and 100% for 60 minutes. (2 hours total).

9.7. **Training**

9.7.1. Training is to be supplied by the start-up technician for the end-user during commissioning. The training should cover basic generator operation and common generator issues that can be managed by the end-user. Training shall be done at the end of the startup within the same day.

9.7.2. Training is to include manual operation of system.

Site Performance Requirements Below

Site Name	Indoor / Outdoor	Enclosure Type	KW Rating	Voltage	Breaker Size	Sound Rating (Max dB)	Run Hours (Min)	Upsize Alt. KW
Water Treatment Plant	Outdoor	Level 2	300	480	500	75 dB	48[1]	350
Lift Station # 1 (High School)	Outdoor	Level 2	80	480	200	72 dB	48[2]	100
Lift Station # 2	Outdoor	Level 2	130	480	200	78 dB	48[2]	200
Lift Station # 3	Outdoor	Level 2	80	480	200	72 dB	48[2]	100
Lift Station # 5	Indoor	None	175	480	400	87 dB	48[2]	250

[1] Fuel tank volume shall be sufficiently sized for the specified runtime at 100% demand.

[2] Fuel tank volume shall be sufficiently sized for the specified runtime at 50% demand.

APPENDIX B

AS-BUILT DRAWING OF THE GENERATOR SITES

REVISION	DESCRIPTION	BY	APP	CITY	DATE

SEWER PIPELINE LIMITS OF CONSTRUCTION CONTROL POINT SCHEDULE

TAG	EASTING	NORTHING
01	6859514.68	2159550.48
02	6859522.70	2159568.99
03	6859578.19	2159668.95
04	6859652.76	2159806.48
05	6859713.72	2159909.43
06	6859770.82	2160007.62
07	6859824.23	2160098.38
08	6859838.98	2160120.20
09	6859986.50	2160307.07
10	6860138.99	2160498.35
11	6860323.89	2160709.47
12	6860345.46	2160713.25
13	6860366.40	2160712.40
14	6860392.36	2160756.08
15	6860364.80	2160770.11
16	6860483.60	2160925.45
17	6860648.30	2161131.80
18	6860752.22	2161255.30
19	6860772.80	2161255.39
20	6860789.34	2161281.56
21	6860730.61	2161319.12
22	6859479.36	2159565.79

BASIS OF COORDINATES AND BEARINGS

THE BASIS OF COORDINATES IS THE PUBLISHED POSITION FOR NGS MONUMENT PID "DH6435" (DESIGNATION "SHADY GLEN"), HAVING A LATITUDE OF 39°07'04.66285" AND A LONGITUDE OF 120°56'57.74393" UTILIZING A COMBINED GROUND GRID FACTOR OF 0.9998014813. THE BASIS OF BEARINGS IS THE BEARING BETWEEN NGS MONUMENT "DH6435" (DESIGNATION "SHADY GLEN") AND "KS0344", HAVING A BEARING OF SOUTH 18°50'59" WEST, BEING CALIFORNIA STATE PLANE COORDINATE SYSTEM (ZONE 2).

BASIS OF ELEVATION

THE BASIS OF ELEVATION FOR THIS SURVEY IS NGS MONUMENT "KS0348" (DESIGNATION "Y830"), HAVING A PUBLISHED ELEVATION OF 2399.17 NAVD88.

INDEX OF DRAWINGS

SHT. NO.	DWG. NO.	TITLE
1	G001	PROJECT TITLE, VICINITY MAP, LOCATION MAP
2	G002	SHEET INDEX, SURVEY CONTROL AND COORDINATE SCHEDULE
3	G003	ABBREVIATIONS, SYMBOLS AND LEGENDS
4	G004	GENERAL NOTES
5	D500	LIFT STATION 5 DEMOLITION PLAN AND SECTION
6	C001	TYPICAL CIVIL DETAILS
7	C002	TYPICAL CIVIL DETAILS
8	C003	TYPICAL CIVIL DETAILS
9	C004	TYPICAL CIVIL DETAILS
10	C005	TYPICAL CIVIL DETAILS
11	C006	PLACER COUNTY DETAILS
12	C007	PLACER COUNTY DETAILS
13	C008	PLACER COUNTY DETAILS
14	C009	PLACER COUNTY DETAILS
15	C010	CALTRANS TRAFFIC CONTROL PLAN
16	C050	CIVIL DETAILS
17	C051	CIVIL DETAILS
18	C100	LIFT STATION 1 SITE PLAN
19	C200	LIFT STATION 2 SITE PLAN
20	C300	LIFT STATION 3 SITE PLAN
21	C400	LIFT STATION 4 SITE / DEMOLITION PLAN
22	C500	LIFT STATION 5 LAYOUT
23	C501	LIFT STATION 5 SITE PLAN
24	C600	LIFT STATION 6 SITE / DEMOLITION PLAN
25	C700	PLAN AND PROFILE KEY SHEET
26	C701	GRAVITY SEWER PLAN AND PROFILE STA. 1+00 TO 10+00
27	C702	GRAVITY SEWER PLAN AND PROFILE STA. 10+00 TO 16+50
28	C703	SEWER FORCEMAIN PLAN AND PROFILE STA. 20+00 TO 27+55
29	C800	SEWER REHABILITATION KEY SHEET
30	C801	SEWER REHABILITATION
31	C802	SEWER REHABILITATION
32	C803	SEWER REHABILITATION
33	C804	SEWER REHABILITATION
34	C805	SEWER REHABILITATION
35	C806	SEWER REHABILITATION
36	C807	SEWER REHABILITATION
37	C808	SEWER REHABILITATION
38	C809	SEWER REHABILITATION
39	C810	SEWER REHABILITATION
40	C900	I-80 SEWER LINE CROSSING
41	M001	TYPICAL MECHANICAL DETAILS
42	M002	TYPICAL MECHANICAL DETAILS
43	M150	LIFT STATIONS 1 & 2 SCHEMATIC & CONTROL ELEVATION TABLES
44	M300	LIFT STATION 3 MECHANICAL PLAN AND SECTION
45	M500	LIFT STATION 5 MECHANICAL PLAN AND SECTION
46	M501	LIFT STATION 5 GENERATOR BUILDING MECHANICAL PLAN AND SECTION
47	EP01	ENVIRONMENTAL PROTECTION GENERAL NOTES
48	EP02	ENVIRONMENTAL PROTECTION DETAILS
49	EP03	ENVIRONMENTAL PROTECTION DETAILS
50	S001	TYPICAL STRUCTURAL NOTES 1
51	S002	TYPICAL STRUCTURAL NOTES 2
52	S003	TYPICAL STRUCTURAL DETAILS 1
53	S004	TYPICAL STRUCTURAL DETAILS 2
54	S005	TYPICAL STRUCTURAL DETAILS 3
55	S500	LIFT STATION 5 EMERGENCY GENERATOR BUILDING FOUNDATION AND ROOF FRAMING PLAN
56	S501	LIFT STATION 5 EMERGENCY GENERATOR BUILDING ELEVATIONS
57	S502	LIFT STATION 5 EMERGENCY GENERATOR BUILDING SECTIONS
58	S503	LIFT STATION 5 EMERGENCY GENERATOR BUILDING SECTIONS AND DETAILS
59	E001	ELECTRICAL SYMBOLS & ABBREVIATIONS
60	E011	LIFT STATION 1 SINGLE-LINE DIAGRAM AND PANEL ELEVATION
61	E012	LIFT STATION 2 SINGLE-LINE DIAGRAM AND PANEL ELEVATION
62	E013	LIFT STATION 3 SINGLE-LINE DIAGRAM AND PANEL ELEVATION
63	E015	LIFT STATION 5 SINGLE-LINE DIAGRAM AND PANEL ELEVATION
64	E020	REDUCED VOLTAGE SOLID STATE (RVSS) ELEMENTARY DIAGRAM
65	E021	VARIABLE FREQUENCY DRIVE (VFD) ELEMENTARY DIAGRAM
66	E040	LIGHTING SCHEDULE
67	E041	TYPICAL ELECTRICAL DETAILS 1
68	E042	TYPICAL ELECTRICAL DETAILS 2
69	E043	TYPICAL CONTROL PANEL CP ELEMENTARY DIAGRAM
70	E100	LIFT STATION 1 ELECTRICAL PLAN
71	E200	LIFT STATION 2 ELECTRICAL PLAN
72	E300	LIFT STATION 3 ELECTRICAL PLAN
73	E500	LIFT STATION 5 ELECTRICAL PLAN
74	E501	LIFT STATION 5 BUILDING ELECTRICAL PLAN
75	I1	INSTRUMENTATION SYMBOLS & ABBREVIATIONS
76	I100	LIFT STATION 1 P&ID
77	I200	LIFT STATION 2 P&ID
78	I300	LIFT STATION 3 P&ID
79	I500	LIFT STATION 5 P&ID

REGISTERED PROFESSIONAL ENGINEER
DAVID KEYSER
No. C 59356
Exp. 9/30/11
CIVIL
STATE OF CALIFORNIA

10/1/09

CONFORMED

SCALE	BAR IS ONE INCH AT FULL SCALE	DATE	DESIGNED DSK	ECO:LOGIC ENGINEERS · CONSULTANTS	CITY OF COLFAX SEWAGE LIFT STATION IMPROVEMENTS & SEWER REHABILITATION©	SHEET INDEX, SURVEY CONTROL AND COORDINATE SCHEDULES	DRAWING NUMBER	SHEET NUMBER
NONE	0 1" IF NOT ONE INCH ON THIS SHEET SCALE ACCORDINGLY	OCTOBER, 2009	DRAWN JRH	www.ecologic-eng.com			G002	2 OF 79
		FILE COLF09-006	CHECKED RDJ					

FILE SPEC: H:\Projects-active\2009\COLF09-006 Colfax Sewer Improvements\CAD\ACTIVE\COLF09-006 G001-G004.DWG
PLOT DATE: Oct 1, 2009 , 7:03:15 am

REVISION	DESCRIPTION	BY	APP	CITY	DATE

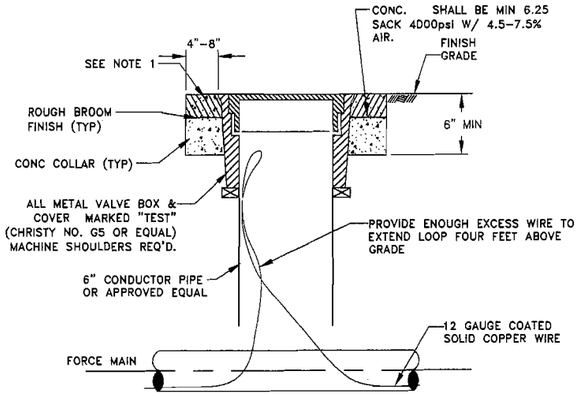

NOTES:

1. CONCRETE COLLAR TO BE LEFT 2" BELOW FINISH ASPH SURFACE. PLACE 2" OF TYPE A ASPH PAVING AROUND VALVE BOX. APPLY SS-1 TACK COAT BEFORE PAVING. SEAL A.C SURFACE W/SS-1 SAND. CHIP SEAL, FOG SEAL, SAND SEAL OR SLURRY SEAL PAVED SURFACE AS REQ'D BY PLANS OR SPECS. EXTEND CONC COLLAR TO GRADE WHEN NOT LOCATED IN ASPH PAVEMENT OR IN UNPAVED AREA.

TEST STATION

SCALE: NONE

C130 / TYP

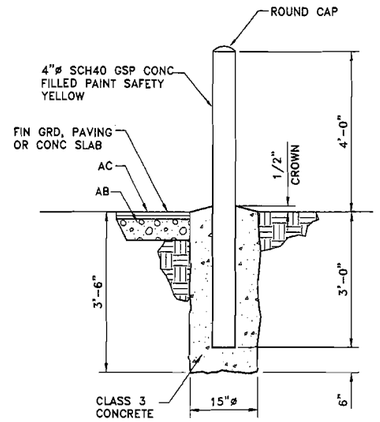

BARRIER POST

SCALE: NONE

C200 / TYP

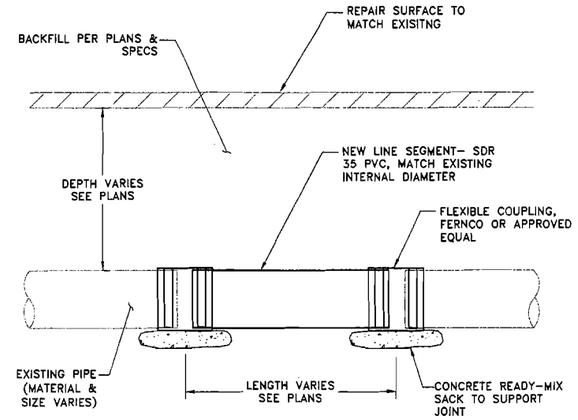

NOTES:

1. BYPASS PUMP SEWAGE TO FACILITATE REPAIR.

SPOT REPAIR DETAIL

SCALE: NONE

C203 / TYP

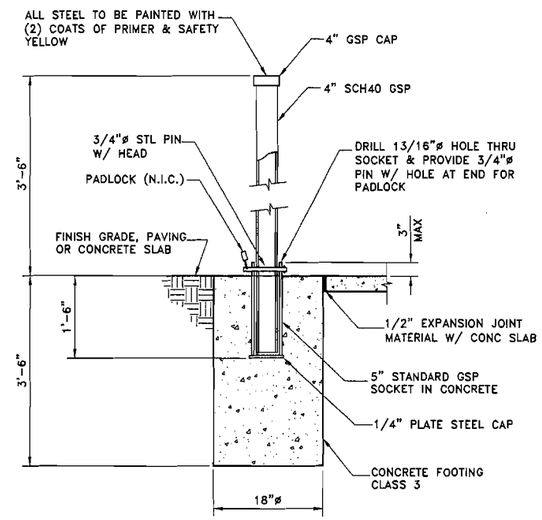

REMOVABLE POST

SCALE: NONE

C205 / TYP

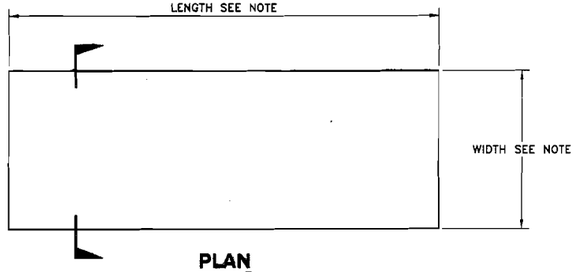

PLAN

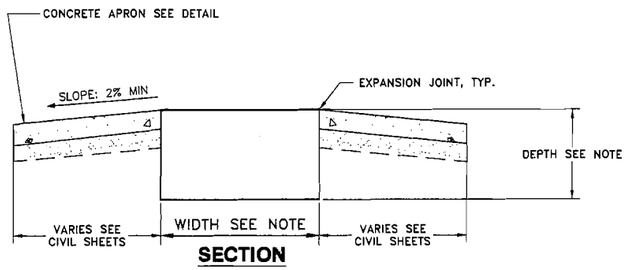

SECTION

NOTE:

PHYSICAL DIMENSIONS OF EQUIPMENT PAD SHALL BE PER EQUIPMENT MANUFACTURERS RECOMMENDATIONS. FOR FURTHER DETAIL SEE STRUCTURAL SHEETS.

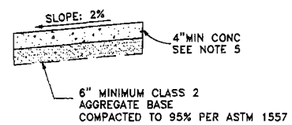

NOTES:

1. PORTLAND CEMENT CONCRETE SHALL CONFORM TO THE REQUIREMENTS PER CALTRANS SPECIFICATIONS FOR CONSTRUCTION FOR CONCRETE EXPOSED TO FREEZE-THAW ENVIRONMENTS.
2. WEAKENED PLANE JOINTS SHALL BE CONSTRUCTED EVERY 5 FT ON SIDEWALKS WIDER THAN 5 FT, THE JOINTING PATTERN SHALL BE 0.8 TO 1.2 TIMES THE WIDTH OF THE SIDEWALK, NOT TO EXCEED 8 FT. THE JOINTS SHALL PENETRATE TO A DEPTH OF 2 IN AND BE CONSTRUCTED IN CONFORMANCE WITH CALTRANS SPECIFICATIONS FOR CONSTRUCTION.
3. EXPANSION JOINTS SHALL BE CONSTRUCTED AT LOCATIONS DESIGNATED IN CALTRANS SPECIFICATIONS FOR CONSTRUCTION.
4. CLASS 2 AGGREGATE BASE SHALL CONFORM TO CALTRANS SPECIFICATIONS FOR CONSTRUCTION.
5. CONCRETE SIDEWALK ADJACENT TO DRIVEWAY APRONS SHALL HAVE A MINIMUM THICKNESS OF 6".
6. NO OBSTRUCTION SUCH AS UTILITY POLES, SIGNAL POLES AND CONTROLS, WATER METER BOXES, PULL BOXES, ETC. ARE ALLOWED WITHIN SIDEWALKS.

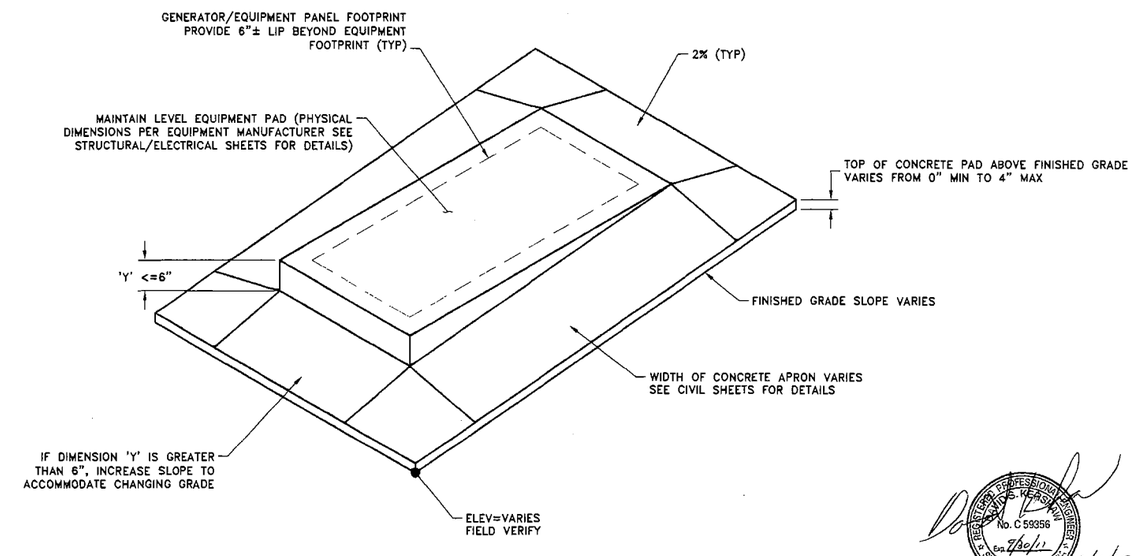

EQUIPMENT PAD & CONCRETE APRON

SCALE: NONE

C206 / TYP

REGISTERED PROFESSIONAL ENGINEER — DAVID S. KEYSER — No. C 59356 — Exp. 12/31/11 — CIVIL — STATE OF CALIFORNIA — 10/16/09

CONFORMED

SCALE	BAR IS ONE INCH AT FULL SCALE	DATE	DESIGNED	ECO:LOGIC ENGINEERS · CONSULTANTS	CITY OF COLFAX SEWAGE LIFT STATION IMPROVEMENTS & SEWER REHABILITATION©	TYPICAL CIVIL DETAILS	DRAWING NUMBER	SHEET NUMBER
AS SHOWN	0 1" IF NOT ONE INCH ON THIS SHEET SCALE ACCORDINGLY	OCTOBER, 2009	DSK	www.ecologic-eng.com			C001	6 OF 79
		FILE COLF09-006	DRAWN JPB					
			CHECKED RDJ					

FILE SPEC: H:\Projects-Active\2009\COLF09-006 Colfax Sewer Improvements\CAD\CIVIL\COLF09-006 C001-C010 - TYP.dwg
PLOT DATE: Oct 16, 2009 - 12:03pm

REVISION	DESCRIPTION	BY	APP	CITY	DATE

NOTES:

1. PER DIRECTION OF THE CITY OF COLFAX EQUIPMENT TO BE REMOVED MAY EITHER BE SALVAGED AND TRANSPORTED TO THE CITY "CORP YARD" OR PROPERLY DISPOSED OF BY THE CONTRACTOR AT THE CONTRACTOR'S EXPENSE.

CALL USA

LOCATE EXISTING UTILITIES. CALL USA AT 1-800-227-2600 48 HOURS PRIOR TO CONSTRUCTION.

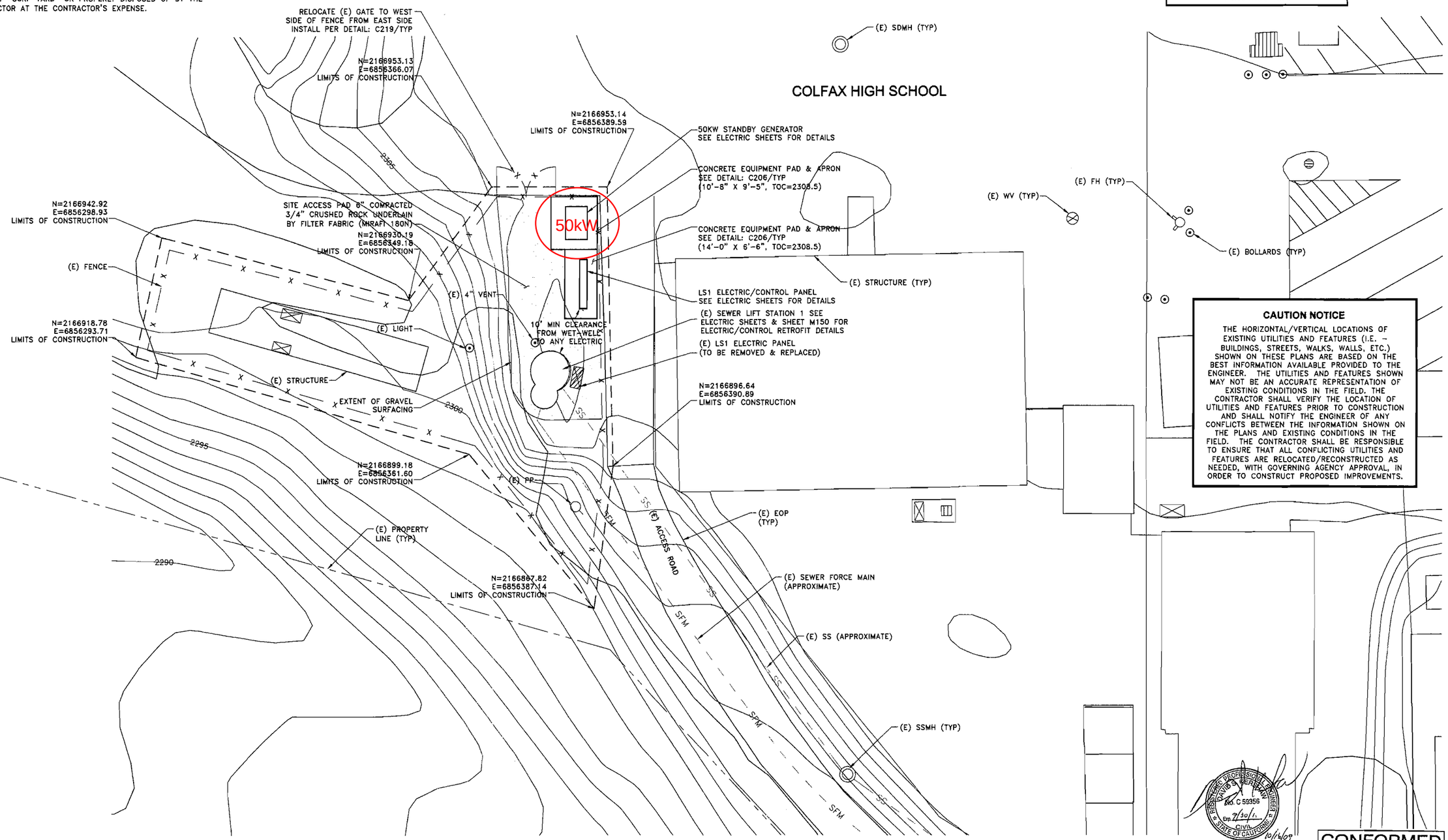

CAUTION NOTICE

THE HORIZONTAL/VERTICAL LOCATIONS OF EXISTING UTILITIES AND FEATURES (I.E. - BUILDINGS, STREETS, WALKS, WALLS, ETC.) SHOWN ON THESE PLANS ARE BASED ON THE BEST INFORMATION AVAILABLE PROVIDED TO THE ENGINEER. THE UTILITIES AND FEATURES SHOWN MAY NOT BE AN ACCURATE REPRESENTATION OF EXISTING CONDITIONS IN THE FIELD. THE CONTRACTOR SHALL VERIFY THE LOCATION OF UTILITIES AND FEATURES PRIOR TO CONSTRUCTION AND SHALL NOTIFY THE ENGINEER OF ANY CONFLICTS BETWEEN THE INFORMATION SHOWN ON THE PLANS AND EXISTING CONDITIONS IN THE FIELD. THE CONTRACTOR SHALL BE RESPONSIBLE TO ENSURE THAT ALL CONFLICTING UTILITIES AND FEATURES ARE RELOCATED/RECONSTRUCTED AS NEEDED, WITH GOVERNING AGENCY APPROVAL, IN ORDER TO CONSTRUCT PROPOSED IMPROVEMENTS.

REGISTERED PROFESSIONAL ENGINEER — DAVID S. WERNER — No. C 59356 — Exp. 2/30/1. — CIVIL — STATE OF CALIFORNIA

SCALE	BAR IS ONE INCH AT FULL SCALE	DATE	DESIGNED	ECO:LOGIC ENGINEERS · CONSULTANTS	CITY OF COLFAX	DRAWING NUMBER	SHEET NUMBER
1" = 10'	0 — 1" IF NOT ONE INCH ON THIS SHEET SCALE ACCORDINGLY	OCTOBER, 2009	DSK	www.ecologic-eng.com	SEWAGE LIFT STATION IMPROVEMENTS & SEWER REHABILITATION©	C100	18 OF 79
		FILE COLF09-006	DRAWN JPB/JRH		LIFT STATION 1 SITE PLAN		
			CHECKED RDJ				

FILE SPEC: H:\Projects-active\2009\COLF09-006 Colfax Sewer Improvements\CAD\ACTIVE\COLF09-006 C100 LIFT STATION SITE.dwg
PLOT DATE: OCT 16, 2009 - 7:29pm

REVISION	DESCRIPTION	BY	APP	CITY	DATE

NOTES:

1. PER DIRECTION OF THE CITY OF COLFAX EQUIPMENT TO BE REMOVED MAY EITHER BE SALVAGED AND TRANSPORTED TO THE CITY "CORP YARD" OR PROPERLY DISPOSED OF BY THE CONTRACTOR AT THE CONTRACTOR'S EXPENSE.

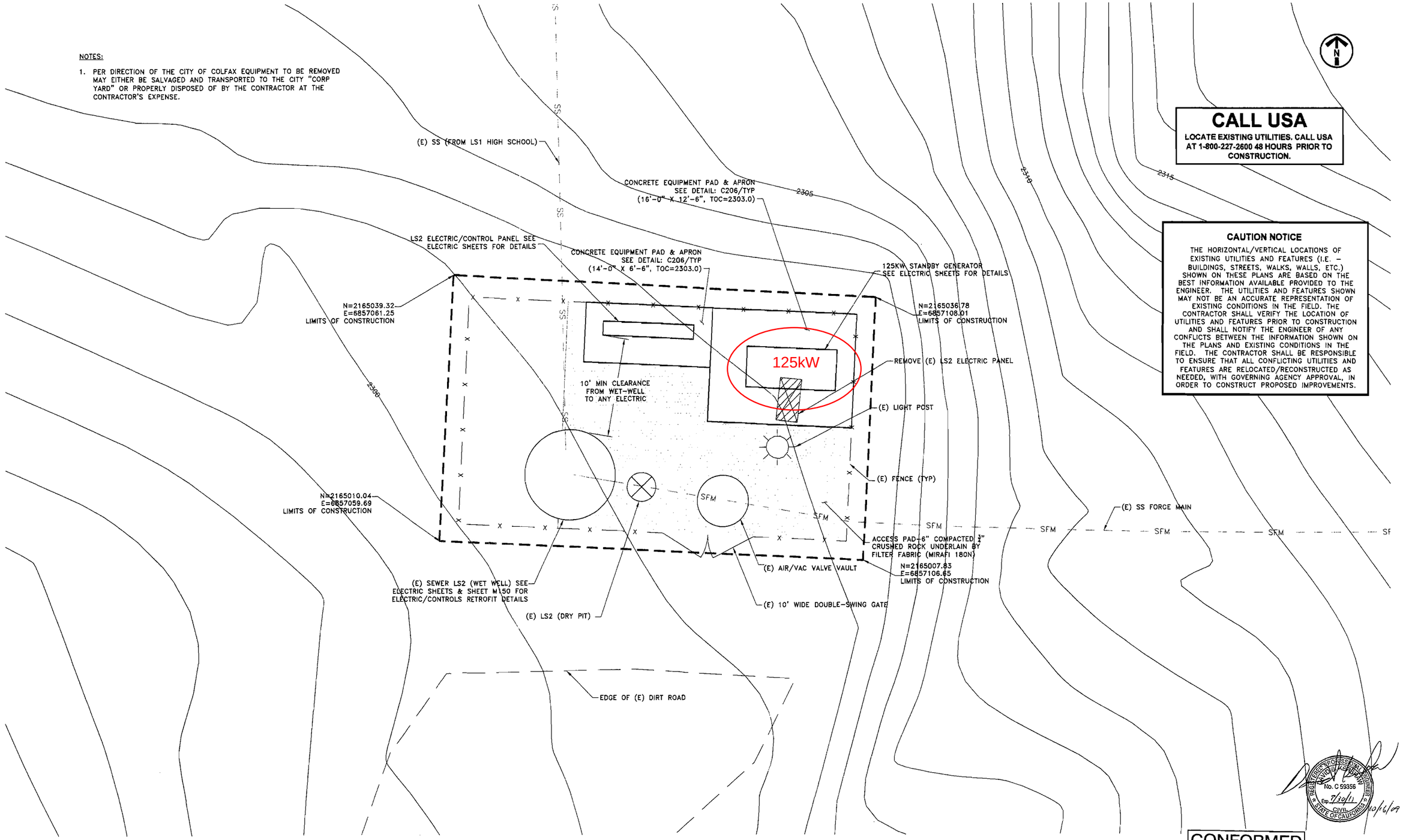

CALL USA

LOCATE EXISTING UTILITIES. CALL USA AT 1-800-227-2600 48 HOURS PRIOR TO CONSTRUCTION.

CAUTION NOTICE

THE HORIZONTAL/VERTICAL LOCATIONS OF EXISTING UTILITIES AND FEATURES (I.E. – BUILDINGS, STREETS, WALKS, WALLS, ETC.) SHOWN ON THESE PLANS ARE BASED ON THE BEST INFORMATION AVAILABLE PROVIDED TO THE ENGINEER. THE UTILITIES AND FEATURES SHOWN MAY NOT BE AN ACCURATE REPRESENTATION OF EXISTING CONDITIONS IN THE FIELD. THE CONTRACTOR SHALL VERIFY THE LOCATION OF UTILITIES AND FEATURES PRIOR TO CONSTRUCTION AND SHALL NOTIFY THE ENGINEER OF ANY CONFLICTS BETWEEN THE INFORMATION SHOWN ON THE PLANS AND EXISTING CONDITIONS IN THE FIELD. THE CONTRACTOR SHALL BE RESPONSIBLE TO ENSURE THAT ALL CONFLICTING UTILITIES AND FEATURES ARE RELOCATED/RECONSTRUCTED AS NEEDED, WITH GOVERNING AGENCY APPROVAL, IN ORDER TO CONSTRUCT PROPOSED IMPROVEMENTS.

REGISTERED PROFESSIONAL ENGINEER
DAVID K. JOHNSON
No. C 59356
Exp. 7/30/11
CIVIL
STATE OF CALIFORNIA
10/16/09

CONFORMED

SCALE	BAR IS ONE INCH AT FULL SCALE	DATE	DESIGNED	ECO:LOGIC ENGINEERS · CONSULTANTS	CITY OF COLFAX	LIFT STATION 2 SITE PLAN	DRAWING NUMBER	SHEET NUMBER
1" = 5'	0 1" IF NOT ONE INCH ON THIS SHEET SCALE ACCORDINGLY	OCTOBER, 2009	DSK	www.ecologic-eng.com	SEWAGE LIFT STATION IMPROVEMENTS & SEWER REHABILITATION ©		C200	19 OF 79
		FILE COLF09-006	DRAWN JPB/JRH					
			CHECKED RDJ					

FILE SPEC: I:\Projects-Active\2008\COLF09-006 Colfax Sewer Improvements\CAD\ACTIVE\COLF09-006 C200 LIFT STATION SITE.dwg
PLOT DATE: 10/16/2009 - 7:26am

REVISION	DESCRIPTION	BY	APP	CITY	DATE

CALL USA

LOCATE EXISTING UTILITIES. CALL USA AT 1-800-227-2600 48 HOURS PRIOR TO CONSTRUCTION.

CAUTION NOTICE

THE HORIZONTAL/VERTICAL LOCATIONS OF EXISTING UTILITIES AND FEATURES (I.E. – BUILDINGS, STREETS, WALKS, WALLS, ETC.) SHOWN ON THESE PLANS ARE BASED ON THE BEST INFORMATION AVAILABLE PROVIDED TO THE ENGINEER. THE UTILITIES AND FEATURES SHOWN MAY NOT BE AN ACCURATE REPRESENTATION OF EXISTING CONDITIONS IN THE FIELD. THE CONTRACTOR SHALL VERIFY THE LOCATION OF UTILITIES AND FEATURES PRIOR TO CONSTRUCTION AND SHALL NOTIFY THE ENGINEER OF ANY CONFLICTS BETWEEN THE INFORMATION SHOWN ON THE PLANS AND EXISTING CONDITIONS IN THE FIELD. THE CONTRACTOR SHALL BE RESPONSIBLE TO ENSURE THAT ALL CONFLICTING UTILITIES AND FEATURES ARE RELOCATED/RECONSTRUCTED AS NEEDED, WITH GOVERNING AGENCY APPROVAL, IN ORDER TO CONSTRUCT PROPOSED IMPROVEMENTS.

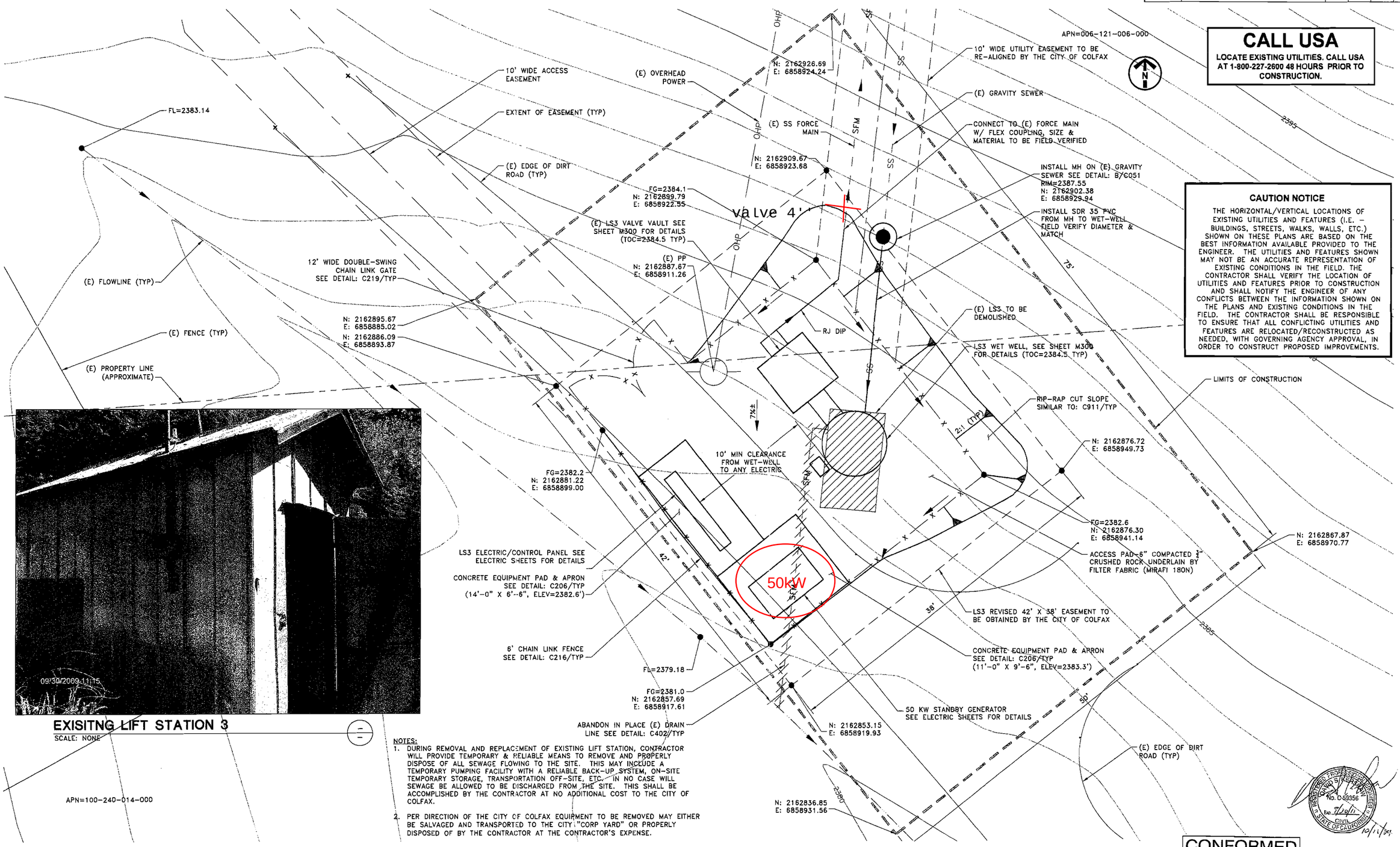

EXISITNG LIFT STATION 3

SCALE: NONE

NOTES:

1. DURING REMOVAL AND REPLACEMENT OF EXISTING LIFT STATION, CONTRACTOR WILL PROVIDE TEMPORARY & RELIABLE MEANS TO REMOVE AND PROPERLY DISPOSE OF ALL SEWAGE FLOWING TO THE SITE. THIS MAY INCLUDE A TEMPORARY PUMPING FACILITY WITH A RELIABLE BACK-UP SYSTEM, ON-SITE TEMPORARY STORAGE, TRANSPORTATION OFF-SITE, ETC. IN NO CASE WILL SEWAGE BE ALLOWED TO BE DISCHARGED FROM THE SITE. THIS SHALL BE ACCOMPLISHED BY THE CONTRACTOR AT NO ADDITIONAL COST TO THE CITY OF COLFAX.
2. PER DIRECTION OF THE CITY OF COLFAX EQUIPMENT TO BE REMOVED MAY EITHER BE SALVAGED AND TRANSPORTED TO THE CITY "CORP YARD" OR PROPERLY DISPOSED OF BY THE CONTRACTOR AT THE CONTRACTOR'S EXPENSE.

REGISTERED PROFESSIONAL ENGINEER — DAVID J. SCHERMERHORN — No. C59356 — Exp. 12/31/11 — CIVIL — STATE OF CALIFORNIA — 10/1/09

CONFORMED

SCALE	BAR IS ONE INCH AT FULL SCALE	DATE	DESIGNED	ECO:LOGIC ENGINEERS · CONSULTANTS	CITY OF COLFAX	DRAWING NUMBER	SHEET NUMBER
1" = 5'	0 — 1" IF NOT ONE INCH ON THIS SHEET SCALE ACCORDINGLY	OCTOBER, 2009	DSK	www.ecologic-eng.com	SEWAGE LIFT STATION IMPROVEMENTS & SEWER REHABILITATION©	C300	20 OF 79
		FILE COLF09-006	DRAWN JPB		LIFT STATION 3 SITE PLAN		
			CHECKED RDJ				

FILE SPEC: H:\Projects-Active\2009\COLF09-006 Colfax Sewer Improvements\CAD\ACTIVE\COLF09-006 C300 LIFT STATION SITE.dwg
PLOT DATE: 10/1/2009 7:09am

REVISION	DESCRIPTION	BY	APP	CITY	DATE
1	ADDENDUM 1	JPB	DSK		11/09

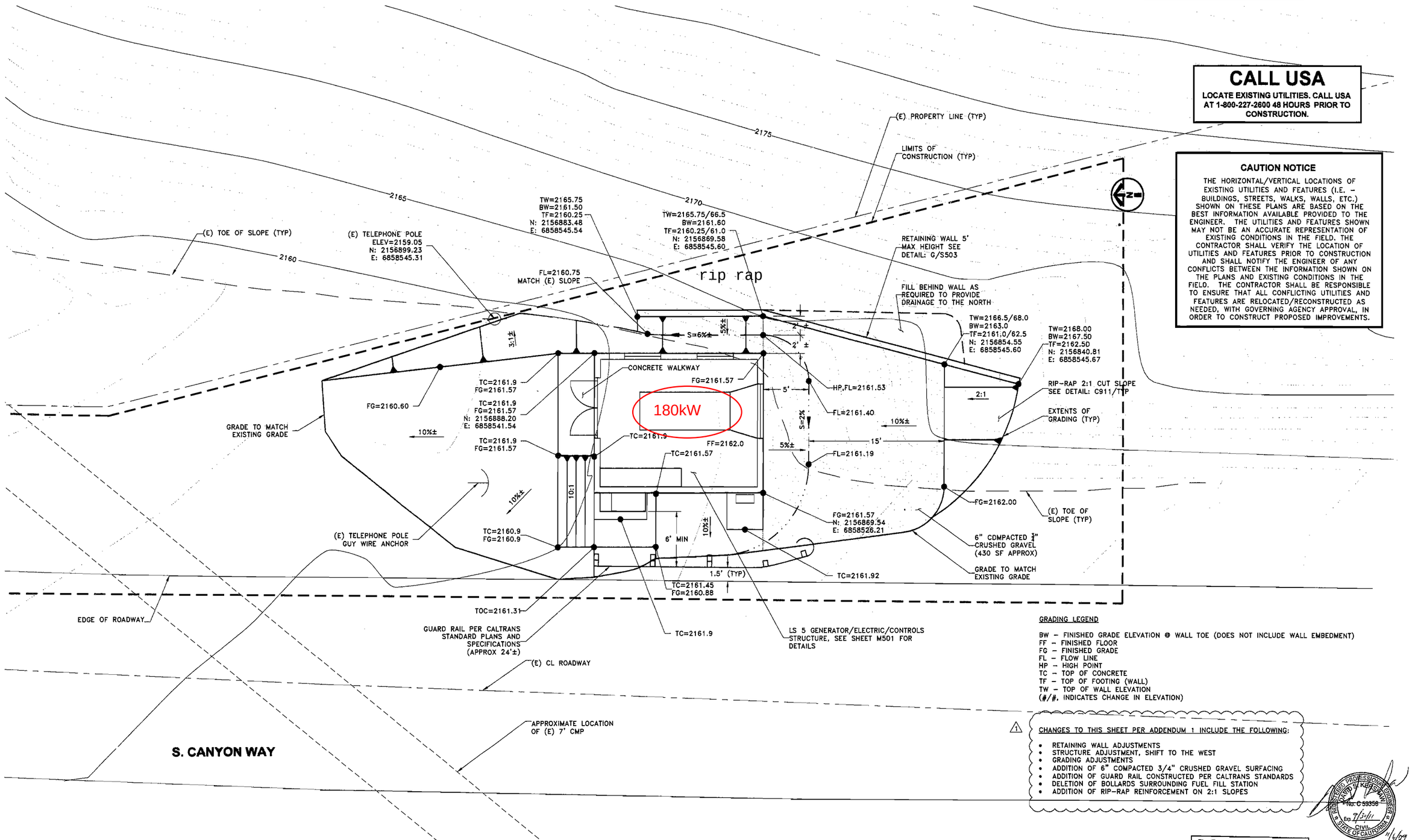

CALL USA

LOCATE EXISTING UTILITIES. CALL USA AT 1-800-227-2600 48 HOURS PRIOR TO CONSTRUCTION.

CAUTION NOTICE

THE HORIZONTAL/VERTICAL LOCATIONS OF EXISTING UTILITIES AND FEATURES (I.E. – BUILDINGS, STREETS, WALKS, WALLS, ETC.) SHOWN ON THESE PLANS ARE BASED ON THE BEST INFORMATION AVAILABLE PROVIDED TO THE ENGINEER. THE UTILITIES AND FEATURES SHOWN MAY NOT BE AN ACCURATE REPRESENTATION OF EXISTING CONDITIONS IN THE FIELD. THE CONTRACTOR SHALL VERIFY THE LOCATION OF UTILITIES AND FEATURES PRIOR TO CONSTRUCTION AND SHALL NOTIFY THE ENGINEER OF ANY CONFLICTS BETWEEN THE INFORMATION SHOWN ON THE PLANS AND EXISTING CONDITIONS IN THE FIELD. THE CONTRACTOR SHALL BE RESPONSIBLE TO ENSURE THAT ALL CONFLICTING UTILITIES AND FEATURES ARE RELOCATED/RECONSTRUCTED AS NEEDED, WITH GOVERNING AGENCY APPROVAL, IN ORDER TO CONSTRUCT PROPOSED IMPROVEMENTS.

GRADING LEGEND

BW – FINISHED GRADE ELEVATION @ WALL TOE (DOES NOT INCLUDE WALL EMBEDMENT)
FF – FINISHED FLOOR
FG – FINISHED GRADE
FL – FLOW LINE
HP – HIGH POINT
TC – TOP OF CONCRETE
TF – TOP OF FOOTING (WALL)
TW – TOP OF WALL ELEVATION
(#/#, INDICATES CHANGE IN ELEVATION)

1 CHANGES TO THIS SHEET PER ADDENDUM 1 INCLUDE THE FOLLOWING:

- RETAINING WALL ADJUSTMENTS
- STRUCTURE ADJUSTMENT, SHIFT TO THE WEST
- GRADING ADJUSTMENTS
- ADDITION OF 6" COMPACTED 3/4" CRUSHED GRAVEL SURFACING
- ADDITION OF GUARD RAIL CONSTRUCTED PER CALTRANS STANDARDS
- DELETION OF BOLLARDS SURROUNDING FUEL FILL STATION
- ADDITION OF RIP-RAP REINFORCEMENT ON 2:1 SLOPES

REGISTERED PROFESSIONAL ENGINEER DAVID S. KEPPLER No. C 59358 Exp. 12/31/11 CIVIL STATE OF CALIFORNIA 11/4/09

CONFORMED

SCALE	BAR IS ONE INCH AT FULL SCALE	DATE	DESIGNED DSK	ECO:LOGIC ENGINEERS · CONSULTANTS	CITY OF COLFAX SEWAGE LIFT STATION IMPROVEMENTS & SEWER REHABILITATION©	LIFT STATION 5 SITE PLAN	DRAWING NUMBER	SHEET NUMBER
1" = 5'	0 1" IF NOT ONE INCH ON THIS SHEET SCALE ACCORDINGLY	OCTOBER, 2009	DRAWN JPB/JRH	www.ecologic-eng.com			C501	23 OF 79
		FILE COLF09-006	CHECKED RDJ					

FILE SPEC: H:\Project-Active\2009\COLF09-006 Colfax Sewer Improvements\CAD\ACTIVE\C01F09-006 C500 LIFT STATION SITE-C3d-option-2.dwg
PLOT DATE: Nov 06, 2009 - 11:19am

REVISION	DESCRIPTION	BY	APP	CITY	DATE
1	ADDENDUM 1	JPB	DSK		11/09

1 DELETION OF BOLLARDS SURROUNDING FUEL FILL STATION

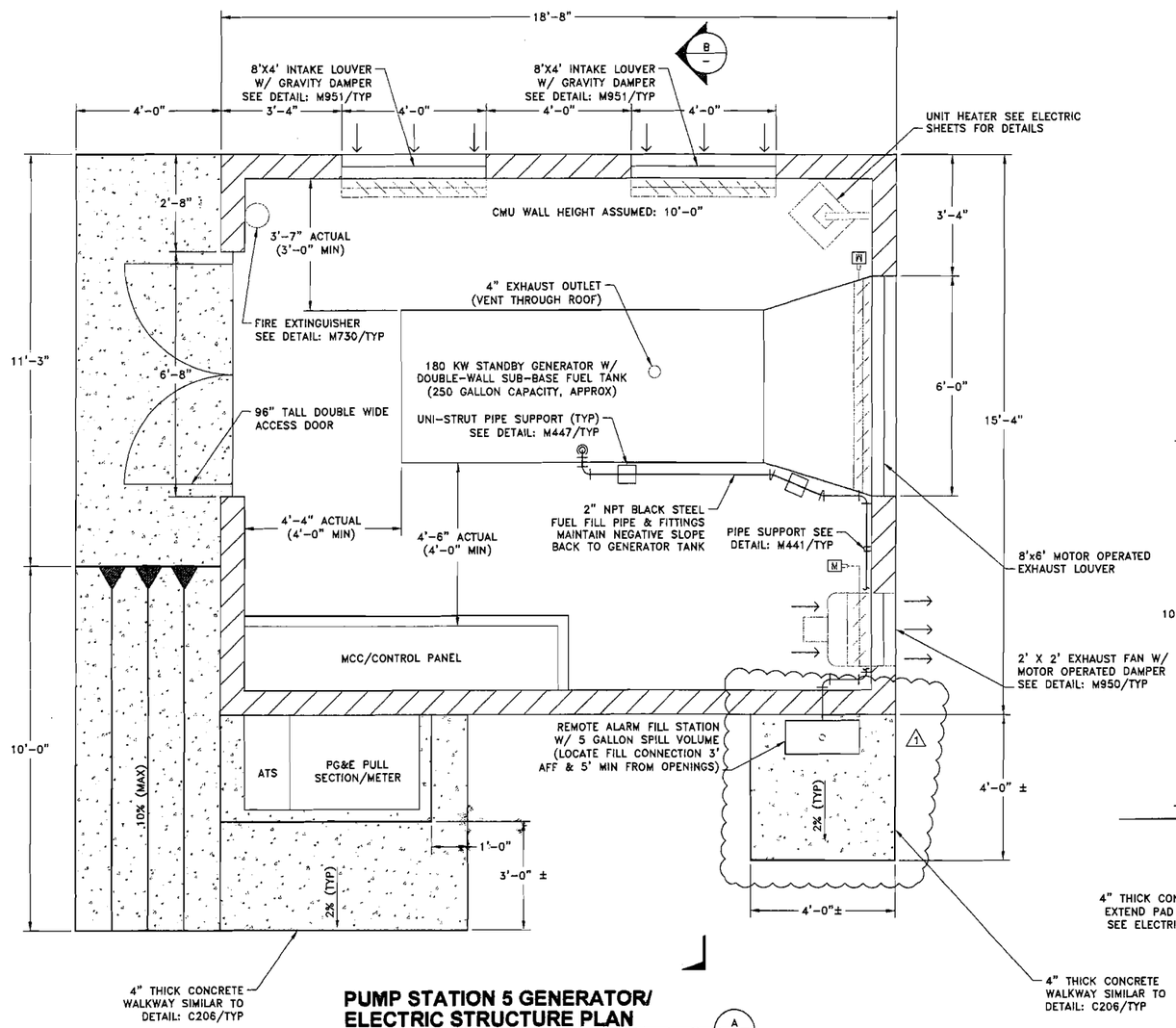

PUMP STATION 5 GENERATOR/ ELECTRIC STRUCTURE PLAN (A / M501)

SCALE: 1/2" = 1'

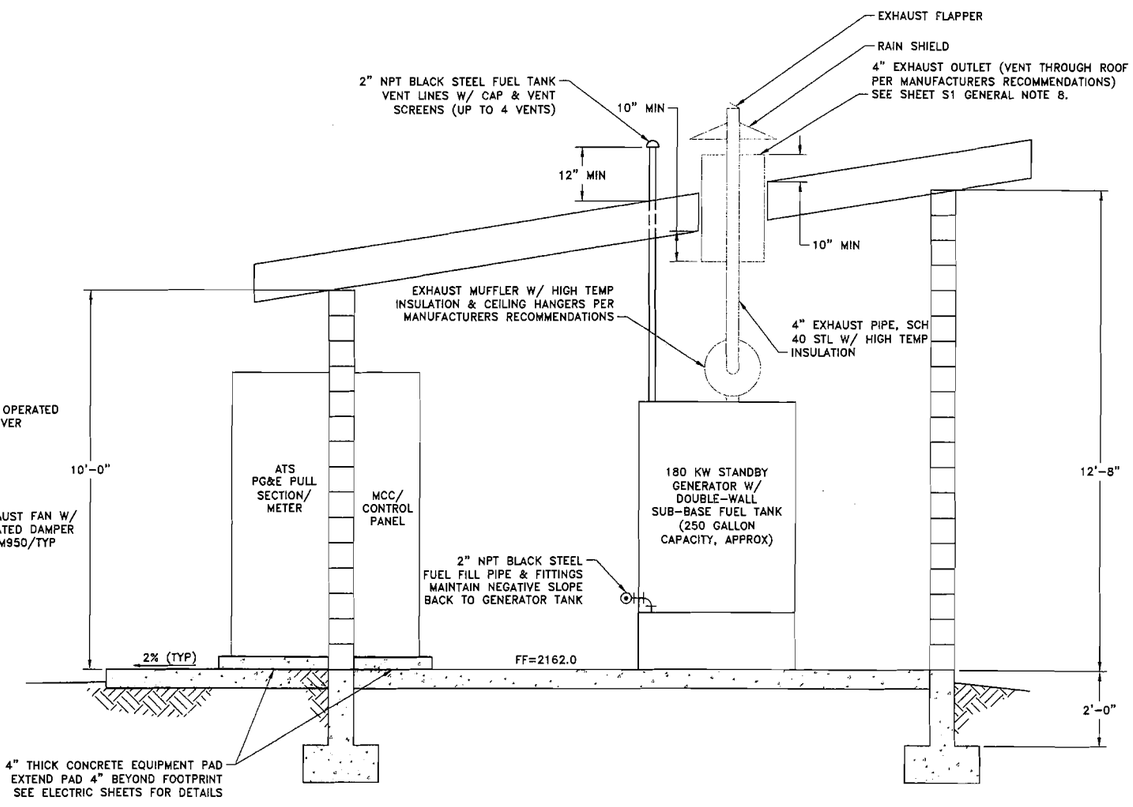

PUMP STATION 5 GENERATOR/ ELECTRIC STRUCTURE SECTION (B / M501)

SCALE: 1/2" = 1'

REGISTERED PROFESSIONAL ENGINEER JAMES S. KERSHAW No. C 59356 Exp. 7/30/11 CIVIL STATE OF CALIFORNIA 11/6/09

CONFORMED

SCALE	BAR IS ONE INCH AT FULL SCALE	DATE	DESIGNED DSK	ECO:LOGIC ENGINEERS · CONSULTANTS	CITY OF COLFAX SEWAGE LIFT STATION IMPROVEMENTS & SEWER REHABILITATION©	LIFT STATION 5 GENERATOR BUILDING MECHANICAL PLAN AND SECTION	DRAWING NUMBER	SHEET NUMBER
AS SHOWN	0 1" IF NOT ONE INCH ON THIS SHEET SCALE ACCORDINGLY	OCTOBER, 2009 FILE COLF09-006	DRAWN JPB CHECKED RDJ	www.ecologic-eng.com			M501	46 OF 79

FILE SPEC: H:\Projects-Active\2009\COLF09-006 Colfax Sewer Improvements\CAD\ACTIVE\COLF09-006 M500.dwg
PLOT DATE: Nov 06, 2009 - 11:19am

REVISION	DESCRIPTION	BY	APP	CITY	DATE

THICKNESS t	BARS "A" SIZE/SPACING	BARS "B" SIZE/SPACING
4"	#4 @ 18" CC	#4 @ 18" CC
6"	#5 @ 18" CC	#5 @ 18" CC
8"	#5 @ 12" CC	#5 @ 12" CC
12"	#5 @ 12" CC T&B	#5 @ 12" CC T&B

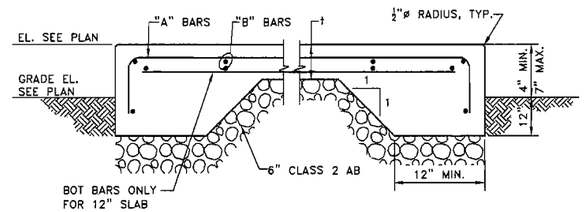

NOTES:
FOR SLAB THICKNESS UP TO 8", REINFORCEMENT SHALL BE PLACED AT SLAB CENTER.

CONCRETE SLAB ON GRADE

SCALE: NONE

S245 / TYP

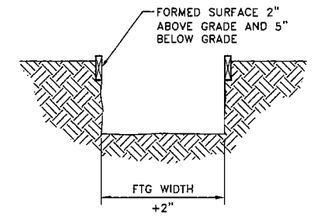

FOOTING POUR OPTION

SCALE: NONE

S246 / TYP

GENERATOR TABLE

GENERATOR SIZE	PAD DIMENSIONS	
KW RATING	"X" (FT)	"Y" (FT)
50 KW	13.5	9.5
125 KW	15.5	9.5
180 KW	16.0	10.0

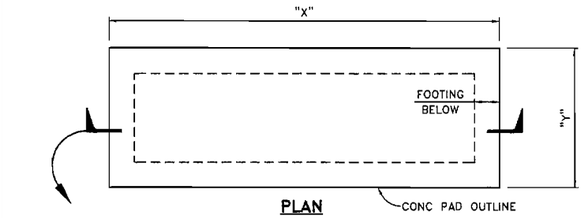

PLAN

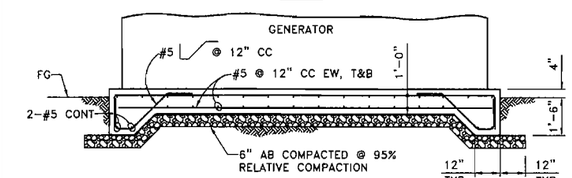

SECTION

NOTES:
1. FOR "X" AND "Y" DIMENSIONS, SEE TABLE
2. ANCHOR BOLTS TO BE COORDINATED WITH GENERATOR SUPPLIER AND PLACED PRIOR TO CONCRETE PLACEMENT.
3. MAINTAIN A LEVEL EQUIPMENT PAD SURFACE AND SLOPE AT 2% BEYOND THE GENERATOR.
4. CONTRACTOR SHALL PROVIDE SEISMIC ANCHORAGE CALCULATIONS, STAMPED AND SIGNED BY A CALIFORNIA REGISTERED CIVIL OR STRUCTURAL ENGINEER

GENERATOR SLAB DETAIL

SCALE: NONE

S247 / TYP

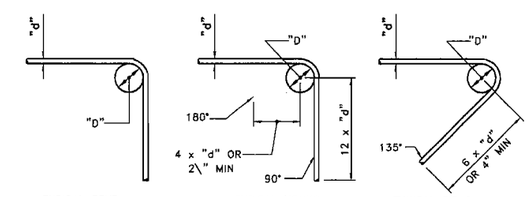

TYPICAL BEND

#3 - #8 "D" = 6 x "d"
#9 - #11 "D" = 8 x "d"
#14 & #18 "D" = 24 x "d"

TYPICAL HOOKS

TYPICAL TIE & STIRRUP HOOKS

#3 - #4 "D" = 4 x "d"
#5 - #8 "D" = 4 x "d"

REINFORCING BENDS

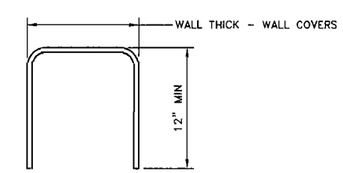

NOTES:
1. TO BE PROVIDED AT:
   a. TOP OF WALL
   b. TOP AND BOTTOM OF THE WALL AT OPENING
2. MATCH SIZE AND SPACING OF U BARS WITH WALL VERTICAL REINFORCEMENT.

TYPICAL WALL U BARS

REINFORCING BENDS

SCALE: NONE

S257 / TYP

REGISTERED PROFESSIONAL ENGINEER
CHRISTOPHER SUBRAMANIAN
No. C66299
Exp. 6-30-2010
CIVIL
STATE OF CALIFORNIA
10/19/09

CONFORMED

SCALE	BAR IS ONE INCH AT FULL SCALE	DATE	DESIGNED KKC	ECO:LOGIC ENGINEERS · CONSULTANTS	CITY OF COLFAX	TYPICAL STRUCTURAL DETAILS 2	DRAWING NUMBER	SHEET NUMBER
NONE	0 1" IF NOT ONE INCH ON THIS SHEET SCALE ACCORDINGLY	OCTOBER, 2009	DRAWN DCP	www.ecologic-eng.com	SEWAGE LIFT STATION IMPROVEMENTS & SEWER REHABILITATION©		S004	53 OF 79
		FILE COLF09-006	CHECKED GSS					

FILE SPEC: P:\COLF09-006\ACT\COLF09-001-S003 to S005.dwg
PLOT DATE: Oct 19, 2009 - 11:14am

REVISION	DESCRIPTION	BY	APP	CITY	DATE

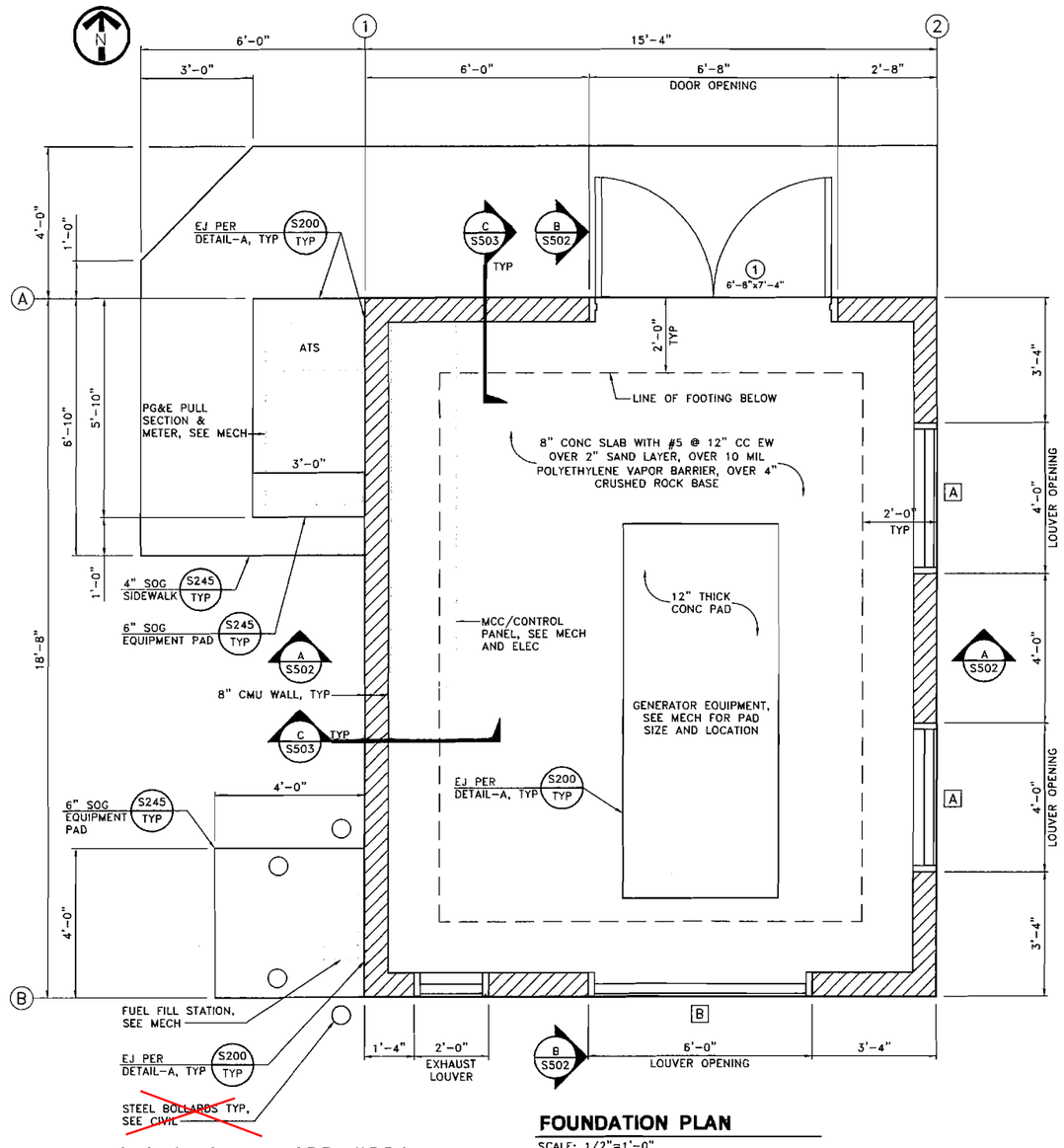

deleted per ADD #001

FOUNDATION PLAN

SCALE: 1/2"=1'-0"

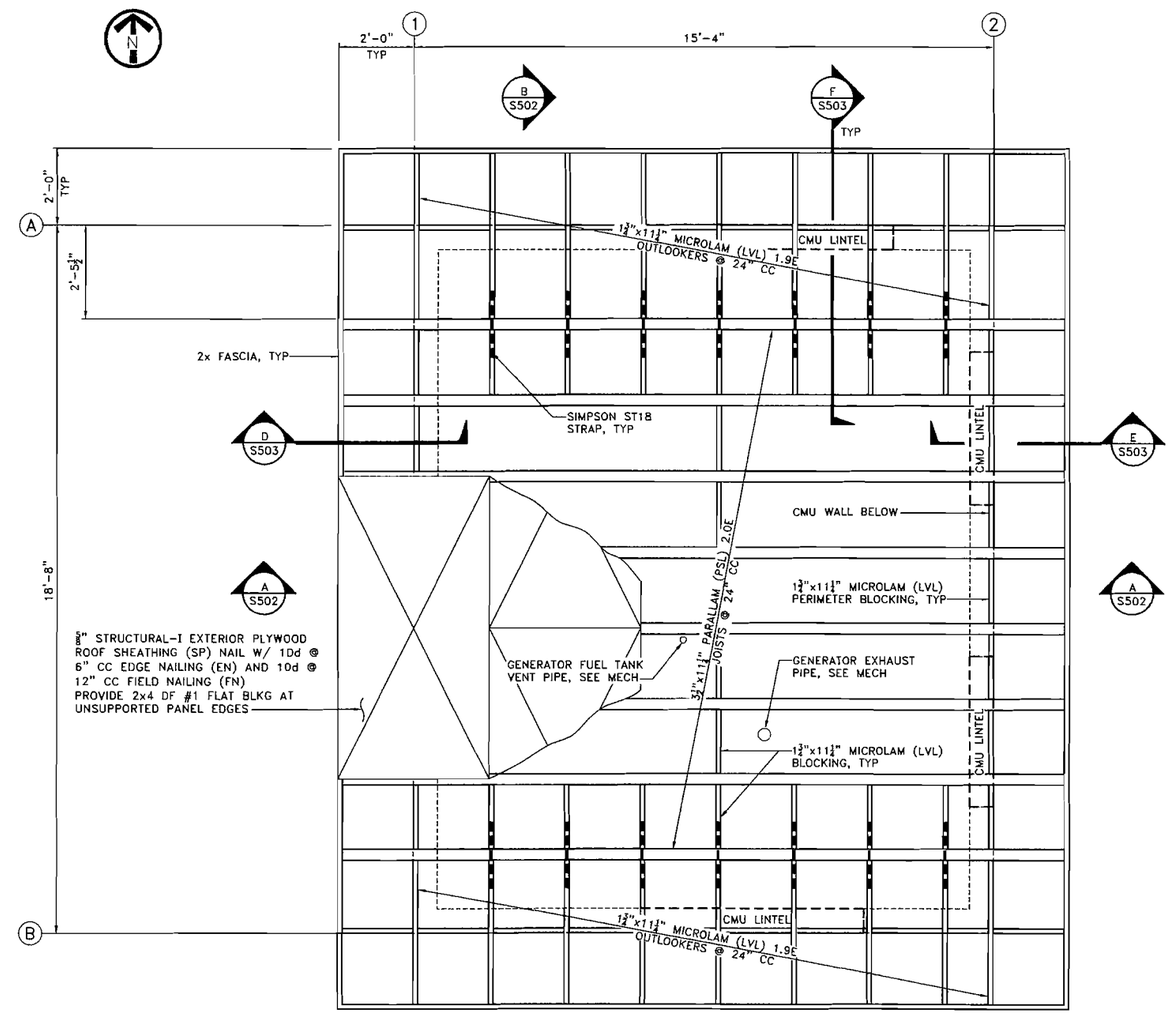

ROOF FRAMING PLAN

SCALE: 1/2"=1'-0"

LEGEND:

- INDICATES 8x8x16 CMU WALL, SOLID GROUTED
- (1) = DOORS (SEE SCHEDULE)
- [A] = LOUVERS (SEE SCHEDULE)

NOTES:

1. CONTRACTOR SHALL SUBMIT GENERATOR EQUIPMENT SEISMIC ANCHORAGE CALCULATIONS FOR ENGINEER'S APPROVAL. CALCULATIONS SHALL BE STAMPED BY A CALIFORNIA LICENSED CIVIL OR STRUCTURAL ENGINEER.
2. FOR RETAINING WALL ADJACENT TO THE BUILDING, SEE CIVIL PLANS FOR LOCATION AND EXTENTS. FOR REINFORCEMENT DETAILS, SEE G S503

DOOR SCHEDULE

NO.	NOMINAL OPENING	DOOR					FRAME		HDWR SET#	REMARKS
		MATL	THK	FINISH	TYPE	SILL	MATL	FINISH		
(1)	6'-8" x 7'-4"	METAL	1 3/4"	PAINT	FLUSH	ALUMINUM	METAL	PAINT	#101	SEE SPECIFICATION 08110 FOR HARDWARE DETAILS

LOUVER SCHEDULE

LTR.	QTY.	OPENING SIZE	INSECT SCREENS	TYPE	SECURITY BARS	REMARKS
A	2	4'-0" x 8'-0"	YES	FIXED	YES	INTAKE LOUVERS
B	1	6'-0" x 8'-0"	YES	FIXED	YES	EXHAUST LOUVERS

ROOM FINISH SCHEDULE

RM. NO.	ROOM NAME	FLOOR	BASE	WALLS	CEILING	CLG. HT.	REMARKS
-	GENERATOR BLDG	SEALED CONCRETE	NONE	CONCRETE MASONRY UNIT	⅝" TYPE "X" GYP WALL BD PAINT R-30 INSULATION	VARIES	SEE SECTION FOR CEILING HEIGHT

REGISTERED PROFESSIONAL ENGINEER GOPAL KRISHEN SUBRAMANIAN No. C66299 Exp. 6-30-2010 CIVIL STATE OF CALIFORNIA 10/19/09

CONFORMED

SCALE	BAR IS ONE INCH AT FULL SCALE	DATE	DESIGNED KKC	ECO:LOGIC ENGINEERS · CONSULTANTS	CITY OF COLFAX	LIFT STATION 5 EMERGENCY GENERATOR BUILDING FOUNDATION AND ROOF FRAMING PLAN	DRAWING NUMBER	SHEET NUMBER
1/2"=1'-0"	0 1" IF NOT ONE INCH ON THIS SHEET SCALE ACCORDINGLY	OCTOBER, 2009 FILE COLF09-006	DRAWN DCP CHECKED GSS	www.ecologic-eng.com	SEWAGE LIFT STATION IMPROVEMENTS & SEWER REHABILITATION©		S500	55 OF 79

FILE SPEC: P:\COLF09-006\ACT\COLF09-001-S500.dwg PLOT DATE: OCT 19, 2009 - 11:15am

REVISION	DESCRIPTION	BY	APP	CITY	DATE

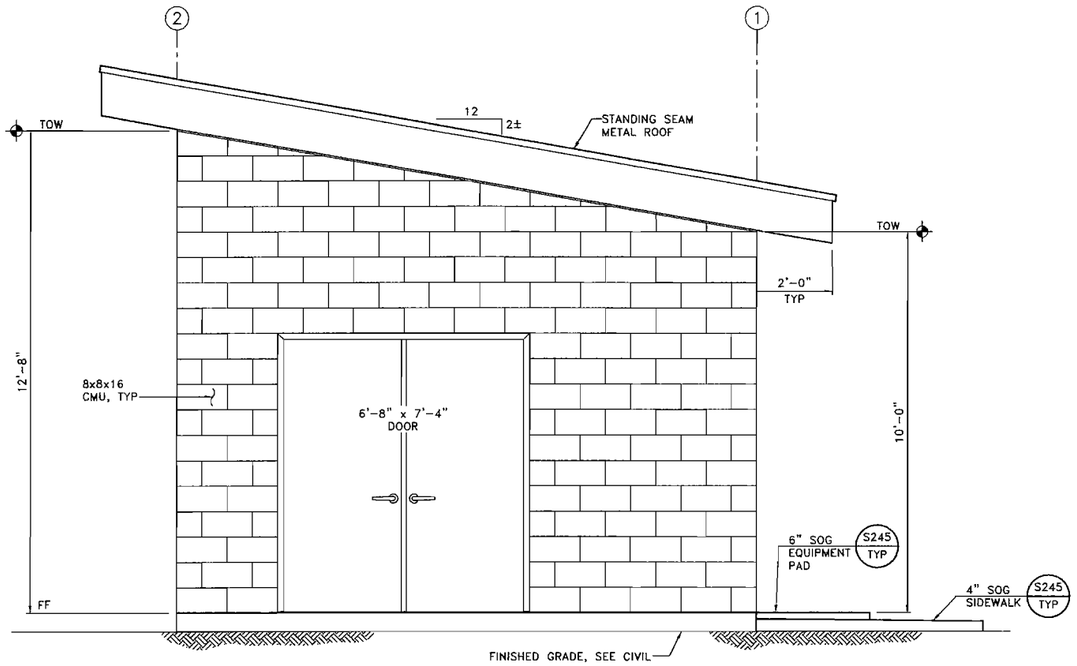

NORTH ELEVATION

SCALE: 1/2"=1'-0"

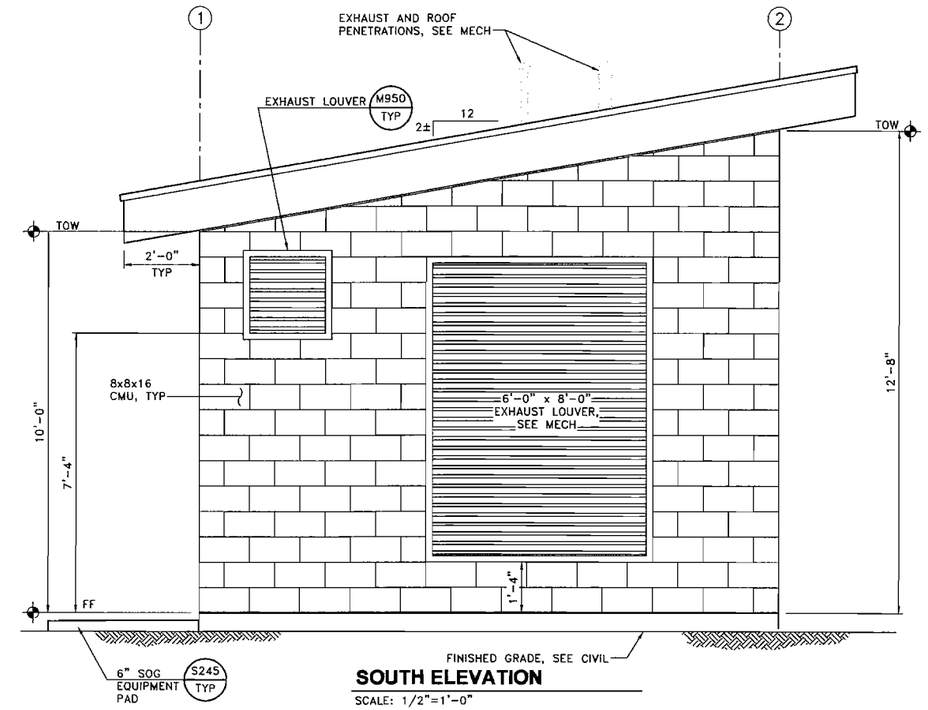

SOUTH ELEVATION

SCALE: 1/2"=1'-0"

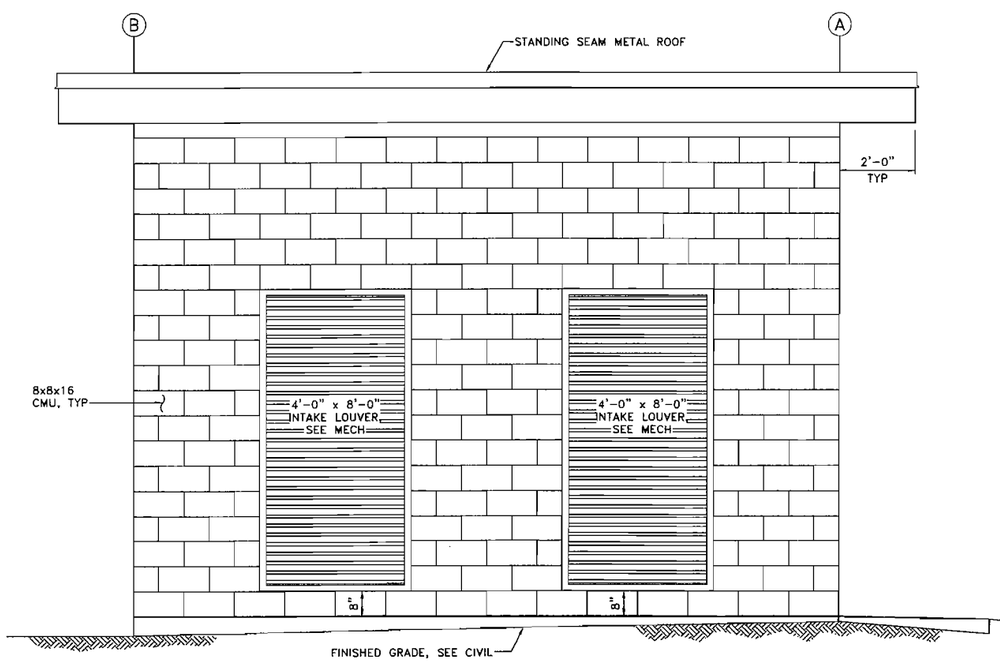

EAST ELEVATION

SCALE: 1/2"=1'-0"

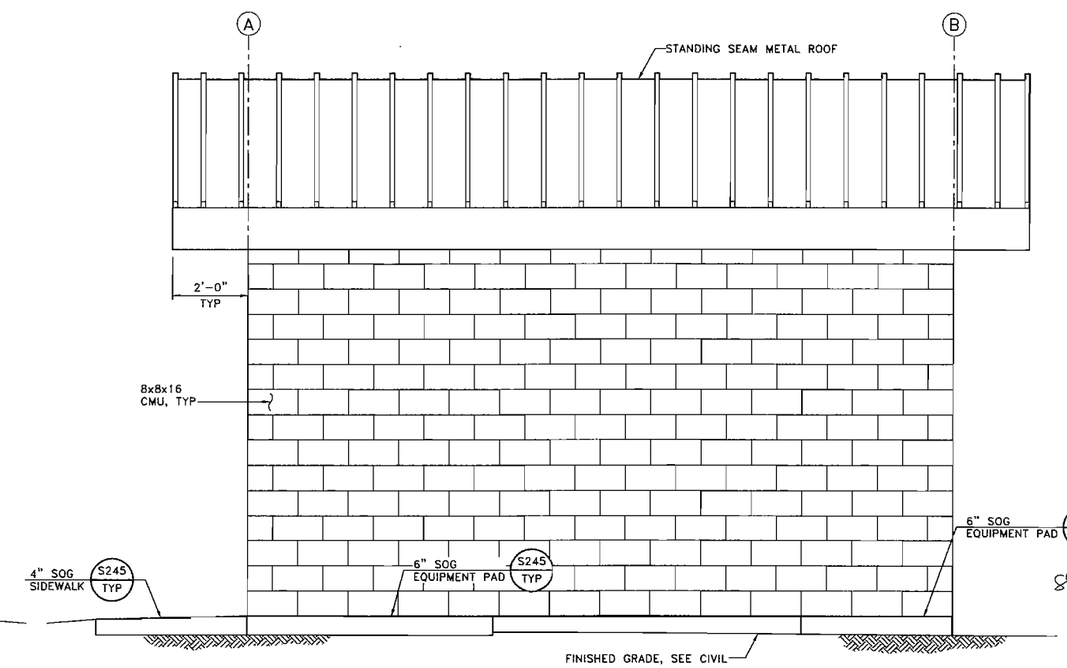

WEST ELEVATION

SCALE: 1/2"=1'-0"

CONFORMED

REGISTERED PROFESSIONAL ENGINEER
GUY S. SALMEN SUBRAMANIAN
No. C66299
Exp. 6-30-2010
CIVIL
STATE OF CALIFORNIA
10/19/09

SCALE	BAR IS ONE INCH AT FULL SCALE	DATE	DESIGNED	ECO:LOGIC ENGINEERS · CONSULTANTS	CITY OF COLFAX	LIFT STATION 5 EMERGENCY GENERATOR BUILDING ELEVATIONS	DRAWING NUMBER	SHEET NUMBER
1/2"=1'-0"	0 1" IF NOT ONE INCH ON THIS SHEET SCALE ACCORDINGLY	OCTOBER, 2009	KKC	www.ecologic-eng.com	SEWAGE LIFT STATION IMPROVEMENTS & SEWER REHABILITATION©		S501	56 OF 79
		FILE COLF09-006	DRAWN DCP					
			CHECKED GSS					

FILE SPEC: P:\COLF09-006\ACT\COLF09-001-S500.dwg
PLOT DATE: Oct 19, 2009 - 1:49pm

REVISION	DESCRIPTION	BY	APP	CITY	DATE

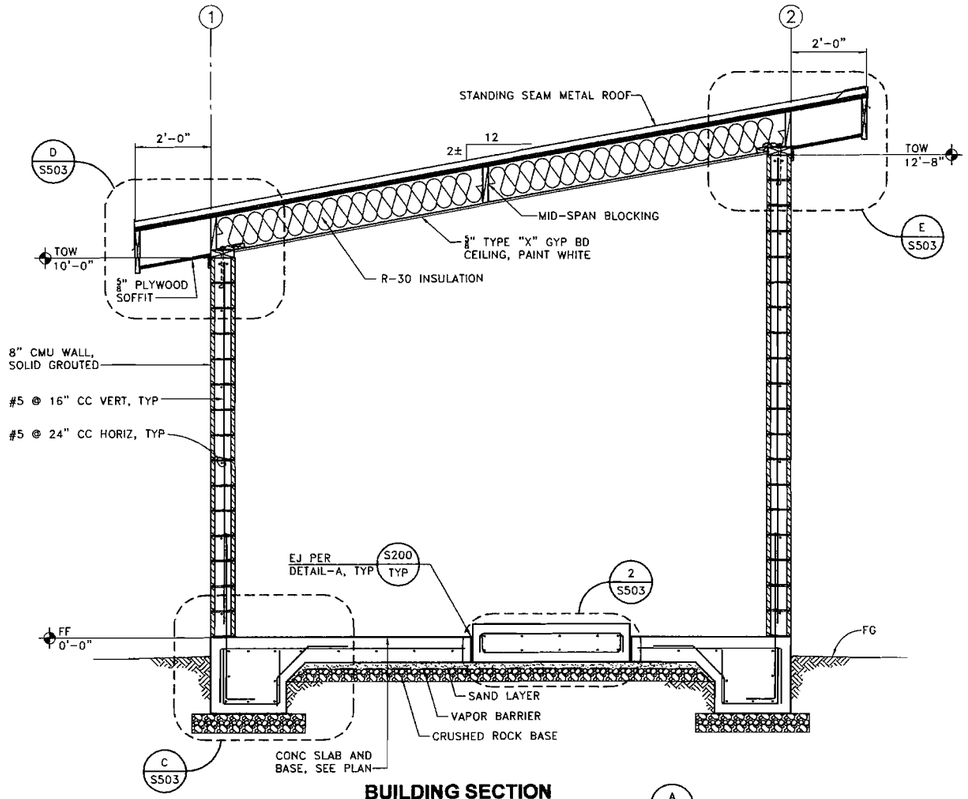

BUILDING SECTION (A / S500)

SCALE: 1/2"=1'-0"

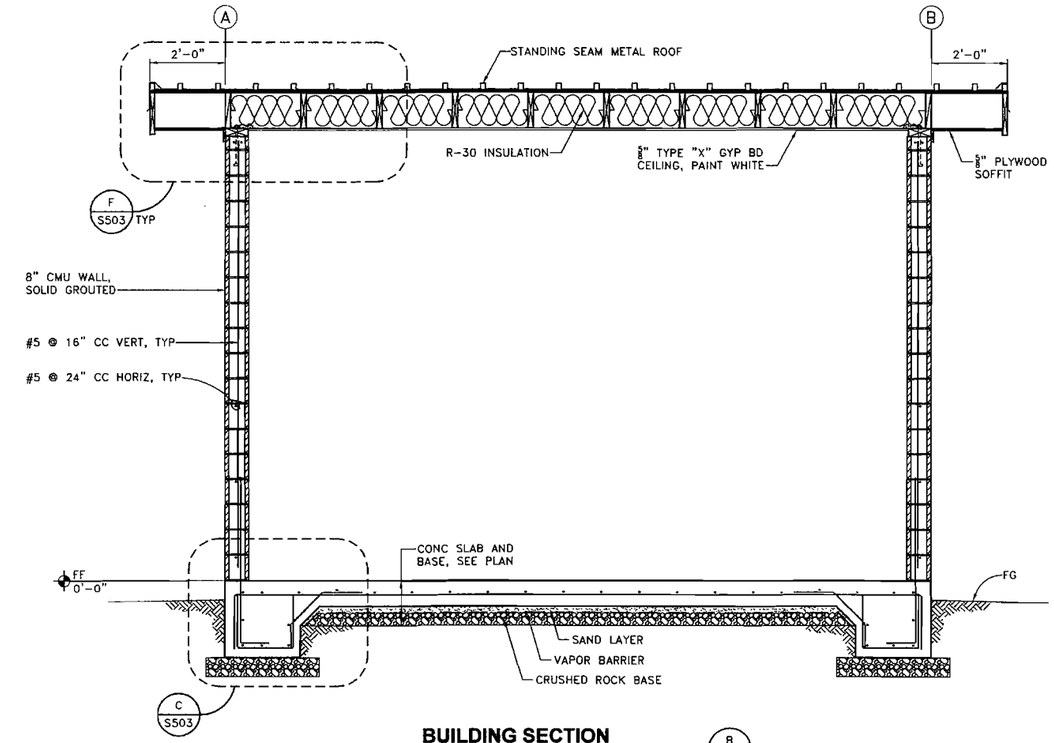

BUILDING SECTION (B / S500)

SCALE: 1/2"=1'-0"

CONFORMED

REGISTERED PROFESSIONAL ENGINEER
CHANDRAKAREN SUBRAMANIAN
No. C66299
Exp. 6-30-2010
CIVIL
STATE OF CALIFORNIA
10/19/09

SCALE	BAR IS ONE INCH AT FULL SCALE	DATE						DRAWING NUMBER	SHEET NUMBER
1/2"=1'-0"	0 — 1" IF NOT ONE INCH ON THIS SHEET SCALE ACCORDINGLY	OCTOBER, 2009	DESIGNED KKC	ECO:LOGIC ENGINEERS · CONSULTANTS	CITY OF COLFAX	LIFT STATION 5		S502	57 OF 79
		FILE COLF09-006	DRAWN DCP	www.ecologic-eng.com	SEWAGE LIFT STATION IMPROVEMENTS & SEWER REHABILITATION©	EMERGENCY GENERATOR BUILDING SECTIONS			
			CHECKED GSS						

FILE SPEC: P:\COLF09-006\ACT\COLF09-001-S500.dwg
PLOT DATE: OCT 19, 2009 - 1:49pm

REVISION	DESCRIPTION	BY	APP	CITY	DATE
1	ADDENDUM NO. 2	ASB	WPC		1/10

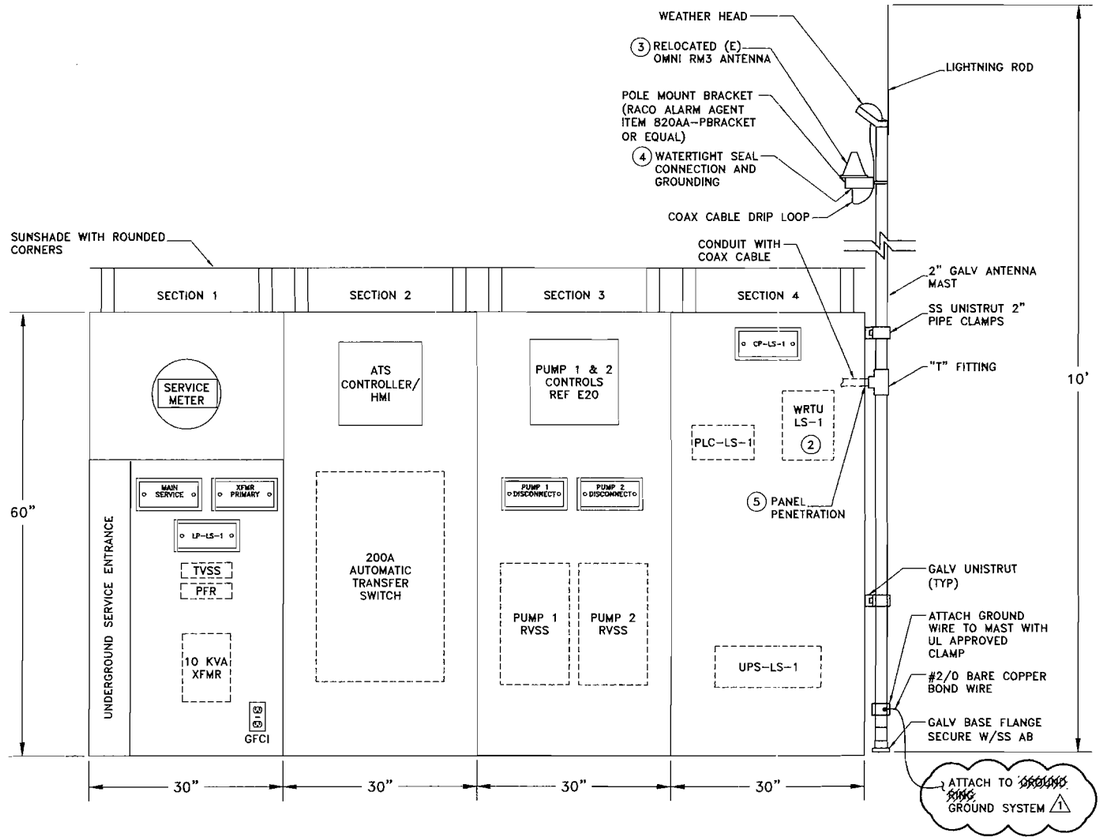

LIFT STATION LS-1 PEDESTAL PANEL ELEVATION (1)

SCALE:NONE

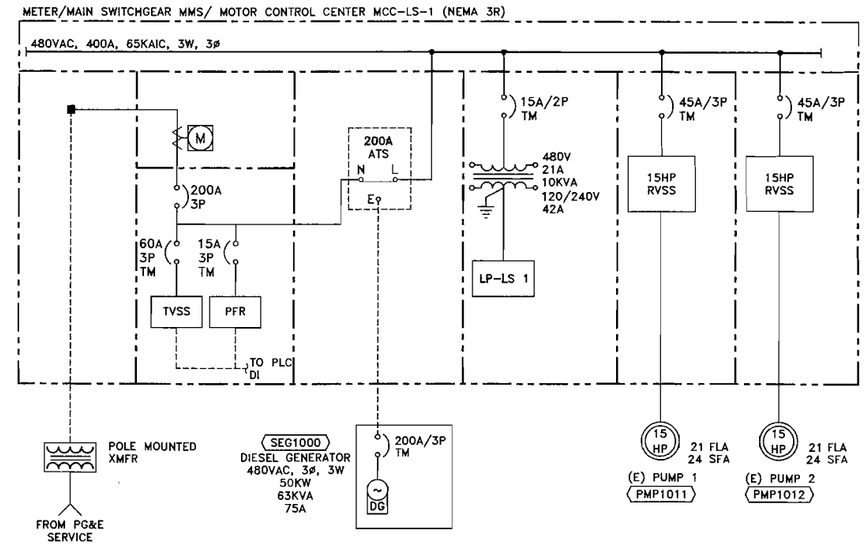

LIFT STATION LS-1 SINGLE LINE DIAGRAM

SCALE:NONE

NOTES:

1. PROVIDE FREE-STANDING PAD MOUNT TYPE 4X PEDESTAL PANEL. INNER DEADFRONT DOORS SHOWN. WEATHERPROOF DOORS NOT SHOWN FOR CLARITY.
2. EXISTING WIRELESS REMOTE TERMINAL UNIT (WRTU) TO BE RELOCATED TO CP-LS-1.
3. RELOCATE (E) WRTU OMNI RM3 ANTENNA TO POLE MOUNT LOCATION SHOWN.
4. MAKE CONNECTION WITH ANDREW SURE GROUND KIT OR EQUAL.
5. WEATHER PROOF AND SEAL OPENING. BOTH INSIDE AND OUT. CAULK/PAINT TO MATCH ENCLOSURE.

PANEL SCHEDULE - LP-LS-1

LOCATION: LIFT STATION 1 | MAIN BKR: None AMP
VOLTAGE: 120Y/240Δ | SYSTEM: 1Φ, 3W
TRIM: FLUSH | BUS RATING: 250A

CKT	LOAD	VA	AMPS	CB	PHASE LOADS-AMPS A	PHASE LOADS-AMPS B	CB	AMPS	VA	LOAD	CKT
1	LIGHTING	240	2.0	20/1	2.6		20/1	0.6	75	LIGHTS- EXT.	2
3	RECEPT	360	3.0	20/1		5.0	20/1	2.0	240	EXHAUST FAN	4
5	BATTERY CHARGER	360	3.0	20/1	3.0		20/1	0.0			6
7						10.4	20/1	0.0			8
9	GENERATOR HEATER	2,500	10.4	20/2	10.4		20/1	0.0			10
11			0.0	20/2		0.0	20/1	0.0			12

Notes		A	B
(L)	Lockout Provision Required	16 A	15 A
(H)	HACR - Rated Breaker	1925 VA	1850 VA
(G)	Ground Fault Interupt Rated Breaker	PHASE LOADS	AVERAGE 16 A
(A)	Arc-Fault Interupt Rated Breaker	102% 98%	TOTAL 4 KVA

LOAD CALCULATION

LOAD CENTER: LS-1 — 480 VAC, 3 PHASE SERVICE

FED FROM: UTILITY

EQUIPMENT NUMBER	HP	EQUIPMENT DESCRIPTION	LOAD (AMPS)	QTY	LOAD (KVA)	UTILITY RUN QTY	UTILITY RUN (KVA)	GENERATOR RUN QTY	GENERATOR RUN (KVA)
	15	LIFT PUMP NO 1	21.0	1	17.5	1	17.5	1	17.5
	15	LIFT PUMP NO 2	21.0	1	17.5	1	17.5	1	17.5
		LIGHTING PANEL LS 1		1	3.8	1	3.8	1	3.8
SUBTOTAL					38.69		38.69		39 KVA
LARGEST MOTOR @ 25%			15	HP			4.36	Size	50 KW
TOTAL							43.06		63 KVA
DIVERSITY FACTOR			100.0%						75 A

3 PHASE CURRENT	52 AMPS	
	100% MAXIMUM LOAD CURRENT	
CALCULATED SERVICE SIZE	52 AMPS	61.9% LOADED
MAIN BREAKER SIZE	200 AMPS	
% LOADED	25.9%	

REGISTERED PROFESSIONAL ENGINEER WILLIAM P. CASSITY No.17132 Exp.9-30-11 ELECTRICAL STATE OF CALIFORNIA 1/12/10

CONFORMED

SCALE	BAR IS ONE INCH AT FULL SCALE	DATE	DESIGNED MR	ECO:LOGIC ENGINEERS · CONSULTANTS	CITY OF COLFAX	LIFT STATION 1	DRAWING NUMBER	SHEET NUMBER
NONE	0 1" IF NOT ONE INCH ON THIS SHEET SCALE ACCORDINGLY	OCTOBER, 2009	DRAWN HAK	www.ecologic-eng.com	SEWAGE LIFT STATION IMPROVEMENTS & SEWER REHABILITATION©	SINGLE LINE DIAGRAM AND PANEL ELEVATION	E11	60 OF 79
		FILE COLF09-006	CHECKED WPC					

FILE SPEC: P:\COLF09-006\ACT\ELECTRICAL\COLF09-006 E011.dwg
PLOT DATE: Jan 12, 2010 - 1:35pm

REVISION	DESCRIPTION	BY	APP	CITY	DATE
1	ADDENDUM NO. 2	ASB	WPC		1/10

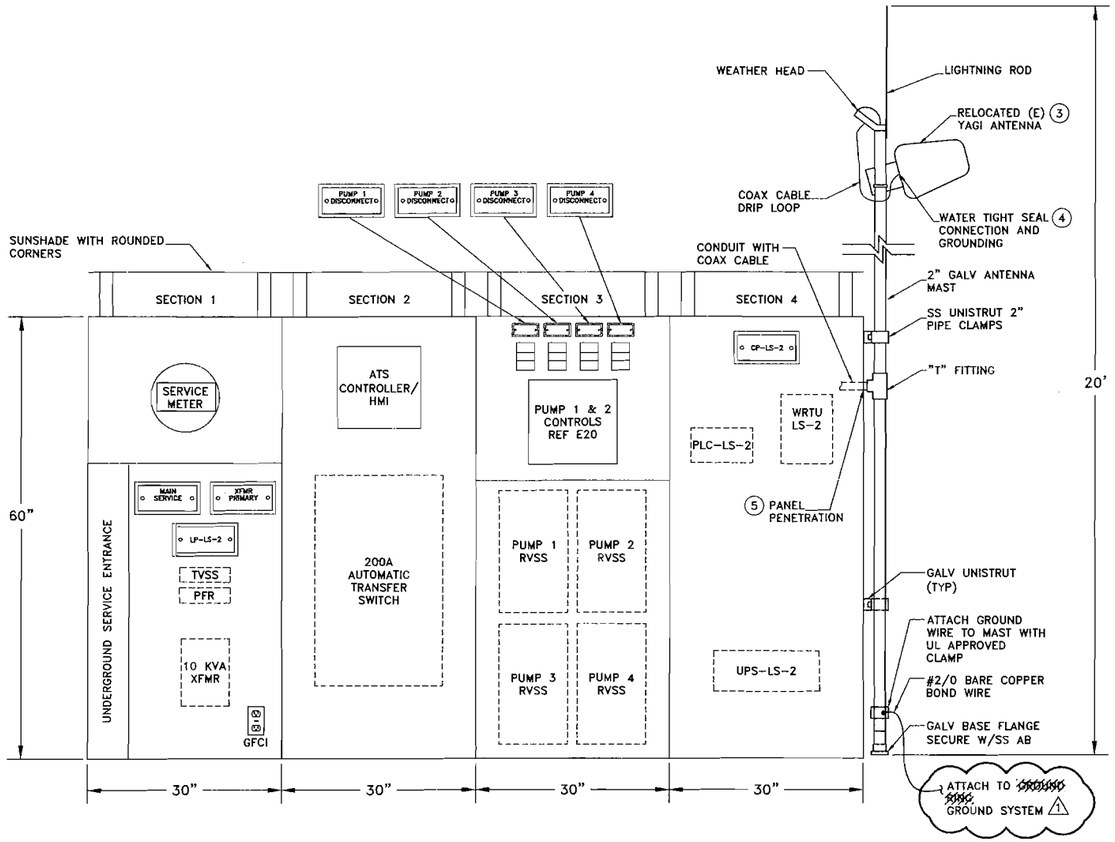

LIFT STATION LS-2 PEDESTAL PANEL ELEVATION 1

SCALE:NONE

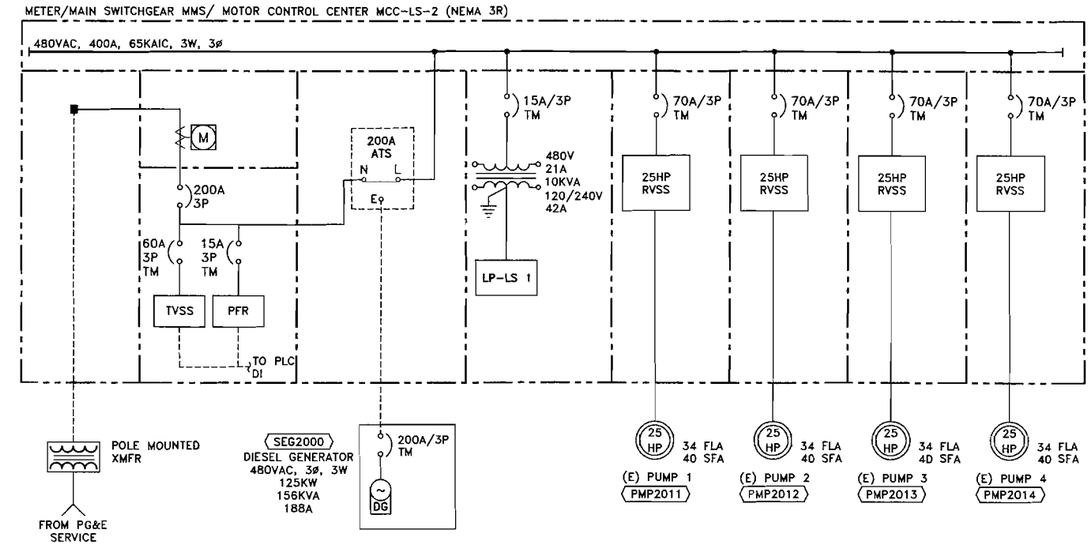

LIFT STATION LS-2 SINGLE LINE DIAGRAM

SCALE:NONE

NOTES:

1. PROVIDE FREE-STANDING PAD MOUNT TYPE 4X PEDESTAL PANEL. INNER DEADFRONT DOORS SHOWN. WEATHERPROOF DOORS NOT SHOWN FOR CLARITY.
2. NOT USED
3. RELOCATE (E) WRTU YAGI ANTENNA TO POLE MOUNT LOCATION SHOWN. ADJUST FOR MAX SIGNAL STRENGTH.
4. MAKE CONNECTION WITH ANDREW SURE GROUND KIT OR EQUAL.
5. WEATHER PROOF AND SEAL OPENING. BOTH INSIDE AND OUT. CAULK/PAINT TO MATCH ENCLOSURE.

PANEL SCHEDULE - LP-LS-2

LOCATION: LIFT STATION 2 — MAIN BKR: None AMP
VOLTAGE: 120Y/240Δ — SYSTEM: 1-Φ, 3W
TRIM: FLUSH — BUS RATING: 250A

CKT	LOAD	VA	AMPS	CB	PHASE LOADS-AMPS A	PHASE LOADS-AMPS B	CB	AMPS	VA	LOAD	CKT
1	LIGHTING	240	2.0	20/1	2.6		20/1	0.6	75	LIGHTS- EXT.	2
3	RECEPT	360	3.0	20/1		5.0	20/1	2.0	240	EXHAUST FAN	4
5	BATTERY CHARGER	360	3.0	20/1	3.0		20/1	0.0			6
7						10.4	20/1	0.0			8
9	GENERATOR HEATER	2,500	10.4	20/2	10.4		20/1	0.0			10
11			0.0	20/2		0.0	20/1	0.0			12

Notes		A	B
(L)	Lockout Provision Required	16 A	15 A
(H)	HACR - Rated Breaker	1925 VA	1850 VA
(G)	Ground Fault Interupt Rated Breaker	PHASE LOADS	AVERAGE 16 A
(A)	Arc-Fault Interupt Rated Breaker	102%	98% TOTAL 4 KVA

LOAD CALCULATION

LOAD CENTER: LS-2 — 480 VAC, 3 PHASE SERVICE

FED FROM: UTILITY

EQUIPMENT NUMBER	HP	EQUIPMENT DESCRIPTION	LOAD (AMPS)	QTY	LOAD (KVA)	UTILITY RUN QTY	UTILITY RUN (KVA)	GENERATOR RUN QTY	GENERATOR RUN (KVA)
	25	LIFT PUMP NO 1	34.0	1	28.3	1	28.3	1	28.3
	25	LIFT PUMP NO 2	34.0	1	28.3	1	28.3	1	28.3
	25	LIFT PUMP NO 3	34.0	1	28.3	1	28.3	1	28.3
	25	LIFT PUMP NO 4	34.0	1	28.3	1	28.3	1	28.3
		LIGHTING PANEL LS 2		1	3.8	1	3.8	1	3.8
SUBTOTAL					116.84		116.84		117 KVA
LARGEST MOTOR @ 25%			25	HP			7.07	Size	125 KW
TOTAL							123.91		156 KVA
DIVERSITY FACTOR			100.0%						188 A

3 PHASE CURRENT	149 AMPS	
	100% MAXIMUM LOAD CURRENT	
CALCULATED SERVICE SIZE	149 AMPS	74.8% LOADED
MAIN BREAKER SIZE	200 AMPS	
% LOADED	74.5%	

REGISTERED PROFESSIONAL ENGINEER WILLIAM P. CASSITY No.17132 Exp.9-30-11 ELECTRICAL STATE OF CALIFORNIA 1/12/10

CONFORMED

SCALE	BAR IS ONE INCH AT FULL SCALE	DATE	DESIGNED MR	ECO:LOGIC ENGINEERS · CONSULTANTS	CITY OF COLFAX	LIFT STATION 2	DRAWING NUMBER	SHEET NUMBER
NONE	0 1" IF NOT ONE INCH ON THIS SHEET SCALE ACCORDINGLY	OCTOBER, 2009	DRAWN HAK	www.ecologic-eng.com	SEWAGE LIFT STATION IMPROVEMENTS & SEWER REHABILITATION©	SINGLE LINE DIAGRAM AND PANEL ELEVATION	E12	61 OF 79
		FILE COLF09-006	CHECKED WPC					

FILE SPEC: P:\COLF09-006\ACT\ELECTRICAL\COLF09-006 E012.dwg
PLOT DATE: MAY 12, 2010 - 12:04pm

REVISION	DESCRIPTION	BY	APP	CITY	DATE
1	ADDENDUM NO. 2	ASB	WPC		1/10

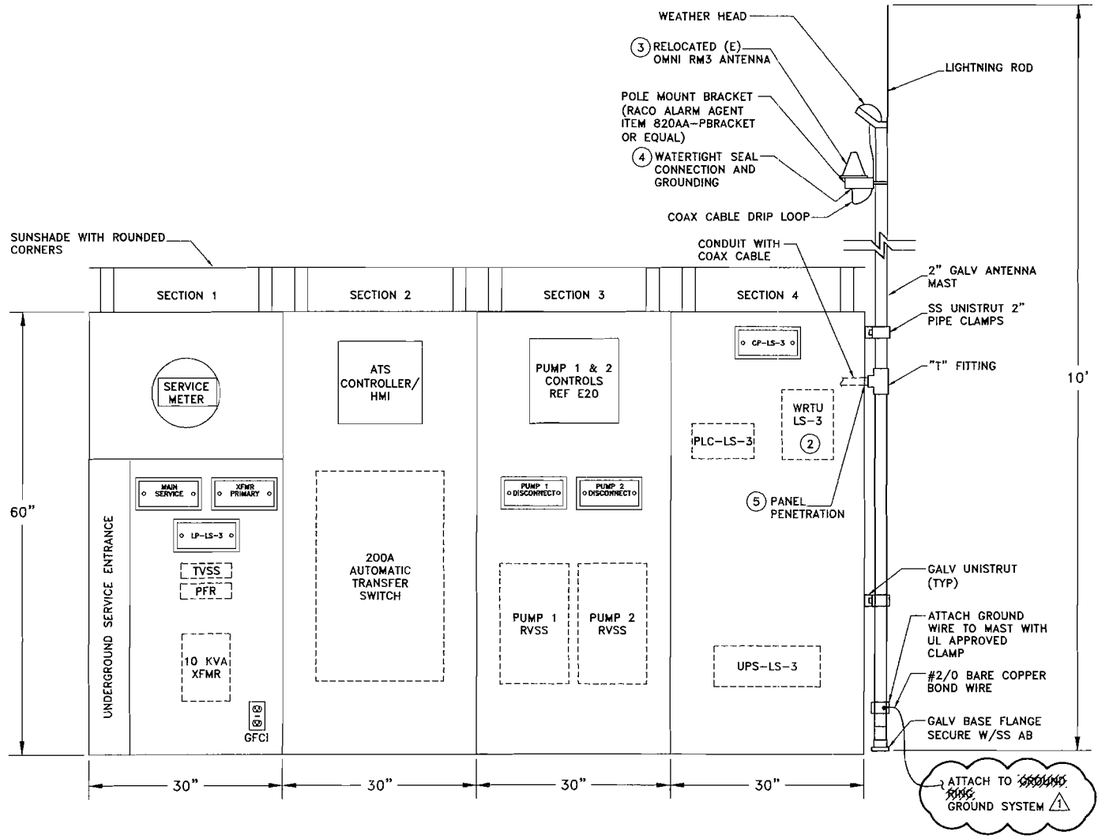

LIFT STATION LS-3 PEDESTAL PANEL ELEVATION (1)

SCALE:NONE

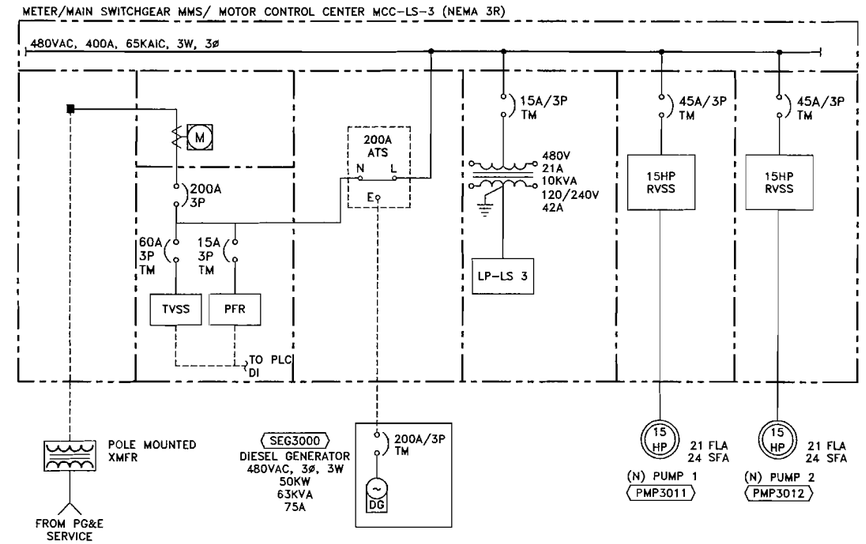

LIFT STATION LS-3 SINGLE LINE DIAGRAM

SCALE:NONE

NOTES:

1. PROVIDE FREE-STANDING PAD MOUNT TYPE 4X PEDESTAL PANEL. INNER DEADFRONT DOORS SHOWN. WEATHERPROOF DOORS NOT SHOWN FOR CLARITY.
2. EXISTING WIRELESS REMOTE TERMINAL UNIT (WRTU) TO BE RELOCATED TO CP-LS-3.
3. RELOCATE (E) WRTU OMNI RM3 ANTENNA TO POLE MOUNT LOCATION SHOWN.
4. MAKE CONNECTION WITH ANDREW SURE GROUND KIT OR EQUAL.
5. WEATHER PROOF AND SEAL OPENING. BOTH INSIDE AND OUT. CAULK/PAINT TO MATCH ENCLOSURE.

PANEL SCHEDULE - LP-LS-3

LOCATION: LIFT STATION 3 — MAIN BKR: None AMP
VOLTAGE: 120Y/240A — SYSTEM: 1ϕ, 3W
TRIM: FLUSH — BUS RATING: 250A

CKT	LOAD	VA	AMPS	CB	PHASE LOADS-AMPS A	PHASE LOADS-AMPS B	CB	AMPS	VA	LOAD	CKT
1	LIGHTING	240	2.0	20/1	2.6		20/1	0.6	75	LIGHTS- EXT.	2
3	RECEPT	360	3.0	20/1		5.0	20/1	2.0	240	EXHAUST FAN	4
5	BATTERY CHARGER	360	3.0	20/1	3.0		20/1	0.0			6
7						10.4	20/1	0.0			8
9	GENERATOR HEATER	2,500	10.4	20/2	10.4		20/1	0.0			10
11			0.0	20/2		0.0	20/1	0.0			12

Notes		A	B
(L)	Lockout Provision Required	16 A	15 A
(H)	HACR - Rated Breaker	1925 VA	1850 VA
(G)	Ground Fault Interupt Rated Breaker	PHASE LOADS	AVERAGE 16 A
(A)	Arc-Fault Interupt Rated Breaker	102%	98% TOTAL 4 KVA

LOAD CALCULATION

LOAD CENTER: LS-3 — 240 VAC, 3 PHASE SERVICE

FED FROM: UTILITY

EQUIPMENT NUMBER	HP	EQUIPMENT DESCRIPTION	LOAD (AMPS)	QTY	LOAD (KVA)	UTILITY RUN QTY	UTILITY RUN (KVA)	GENERATOR RUN QTY	GENERATOR RUN (KVA)
	15	LIFT PUMP NO 1	42.0	1	17.5	1	17.5	1	17.5
	15	LIFT PUMP NO 2	42.0	1	17.5	1	17.5	1	17.5
		LIGHTING PANEL LS 3		1	3.8	1	3.8	1	3.8
SUBTOTAL					38.69		38.69		39 KVA
LARGEST MOTOR @ 25%			15	HP			4.36	Size	50 KW
TOTAL							43.06		63 KVA
DIVERSITY FACTOR			100.0%						150 A

3 PHASE CURRENT	104 AMPS	
	100% MAXIMUM LOAD CURRENT	
CALCULATED SERVICE SIZE	104 AMPS	61.9% LOADED
MAIN BREAKER SIZE	200 AMPS	
% LOADED	51.8%	

REGISTERED PROFESSIONAL ENGINEER WILLIAM P. CASSITY No.17132 Exp.9-30-11 ELECTRICAL STATE OF CALIFORNIA 1/12/10

CONFORMED

SCALE	BAR IS ONE INCH AT FULL SCALE	DATE	DESIGNED MR	ECO:LOGIC ENGINEERS · CONSULTANTS	CITY OF COLFAX	LIFT STATION 3 SINGLE LINE DIAGRAM AND PANEL ELEVATION	DRAWING NUMBER	SHEET NUMBER
NONE	0 1" IF NOT ONE INCH ON THIS SHEET SCALE ACCORDINGLY	OCTOBER, 2009 FILE COLF09-006	DRAWN HAK CHECKED WPC	www.ecologic-eng.com	SEWAGE LIFT STATION IMPROVEMENTS & SEWER REHABILITATION©		E13	62 OF 79

FILE SPEC: P:\COLF09-006\ACT\ELECTRICAL\COLF09-006 E013.dwg
PLOT DATE: Jan 12, 2010 - 1:59pm

REVISION	DESCRIPTION	BY	APP	CITY	DATE

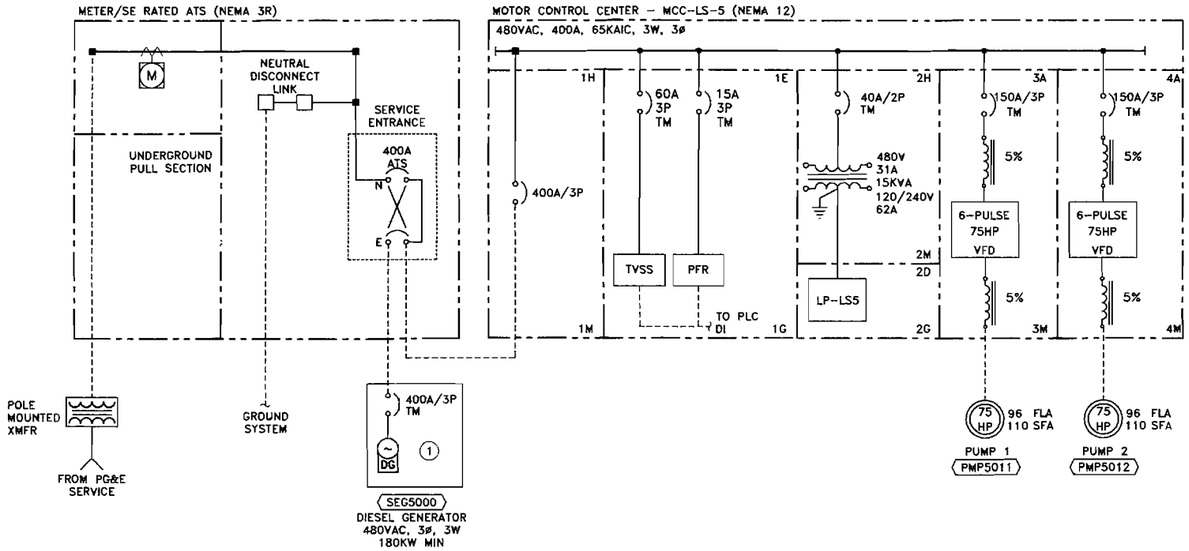

LIFT STATION LS-5 SINGLE LINE DIAGRAM

SCALE: NONE

LOAD CALCULATION									
LOAD CENTER: LS-5			480 VAC, 3 PHASE SERVICE						
FED FROM: UTILITY						UTILITY		GENERATOR	
EQUIPMENT NUMBER	HP	EQUIPMENT DESCRIPTION	LOAD (AMPS)	QTY	LOAD (KVA)	RUN QTY	RUN (KVA)	RUN QTY	RUN (KVA)
	75	LIFT PUMP NO 1	96.0	1	79.8	1	79.8	1	79.8
	75	LIFT PUMP NO 2	96.0	1	79.8	1	79.8	1	79.8
		LIGHTING PANEL LS 5		1	9.7	1	9.7	1	9.7
SUBTOTAL					169.33		169.33		169 KVA
LARGEST MOTOR @ 25%			75	HP			19.95	Size	180 KW
TOTAL							189.28		225 KVA
DIVERSITY FACTOR			100.0%						271 A
3 PHASE CURRENT			228 AMPS						
			100% MAXIMUM LOAD CURRENT						
CALCULATED SERVICE SIZE			228 AMPS					75.3% LOADED	
MAIN BREAKER SIZE			400 AMPS						
% LOADED			56.9%						

LS-5 LOAD CALCULATION

SCALE: NONE

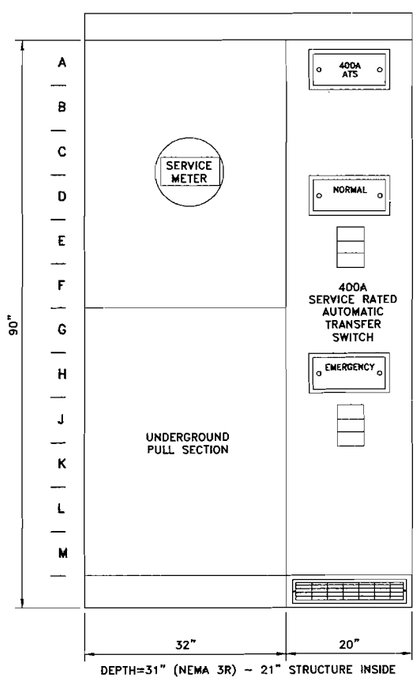

METER/SERVICE ENTRANCE RATED ②③ AUTOMATIC TRANSFER SWITCH ELEVATION

SCALE: NONE

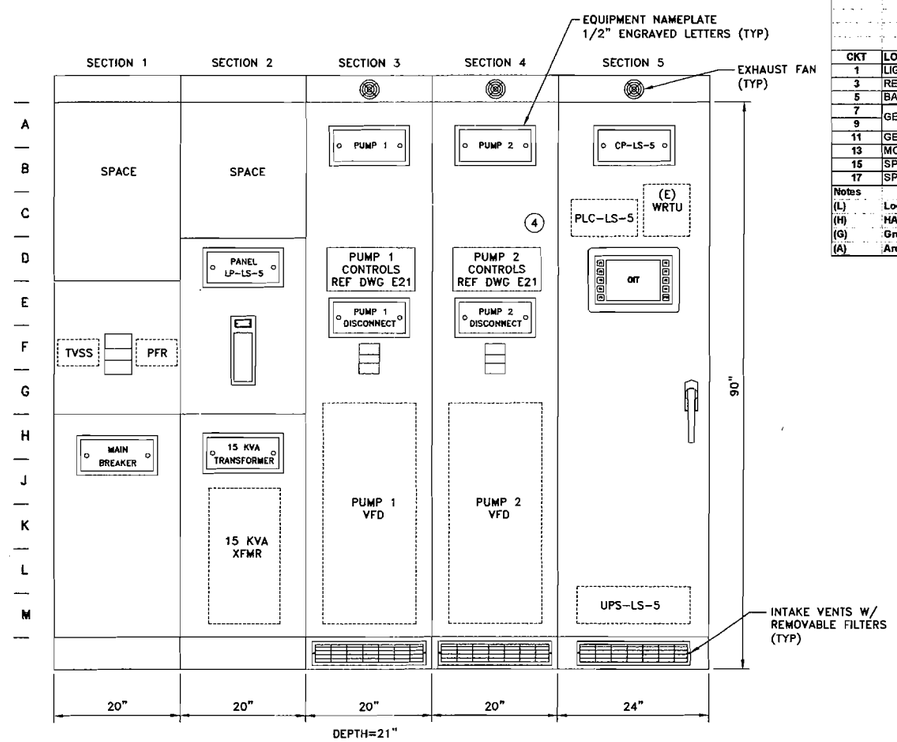

MOTOR CONTROL CENTER MCC-LS-5 ELEVATION

SCALE: NONE

PANEL SCHEDULE - LP-LS-5											
LOCATION LIFT STATION 5				MAIN BKR None AMP							
VOLTAGE 120Y/240Δ				SYSTEM 1Φ, 3W							
TRIM FLUSH				BUS RATING 250A							
				PHASE LOADS-AMPS							
CKT	LOAD	VA	AMPS	CB	A	B	CB	AMPS	VA	LOAD	CKT
1	LIGHTING	250	2.1	20/1	3.3		20/1	1.2	140	LIGHTS- EXT.	2
3	RECEPT	360	3.0	20/1		5.0	20/1(L)	2.0	240	EXHAUST FAN	4
5	BATTERY CHARGER	360	3.0	20/1	4.3		20/1	1.3	160	LIGHTS-DRY WELL	6
7	GENERATOR HEATER	2,500	10.4	20/2(L)		12.4	20/1	2.0	240	RECEPT-DRY WELL	8
9					31.3		30/2(H)(L)	20.8	5,000	ELECTRIC UNIT HEATER (EUH-5000)	10
11	GENERATOR EXHAUST LOUVER	120	0.5	20/1		21.3					12
13	MCC LIGHTS/HTRS	150	1.3	20/1	1.3		20/1	0.0		SPARE	14
15	SPACE					2.0	20/1	2.0	240	FUEL FILL/ALARM STATION	16
17	SPACE				0.0					SPACE	18
Notes					A	B					
(L)	Lockout Provision Required				40 A	41 A					
(H)	HACR - Rated Breaker				4810 VA	4890 VA					
(G)	Ground Fault Interupt Rated Breaker				PHASE LOADS		AVERAGE	40 A			
(A)	Arc-Fault Interupt Rated Breaker				99%	101%	TOTAL	10 KVA			

LS-5 PANEL SCHEDULE

SCALE: NONE

NOTES:

1. GENERATOR SUPPLIER TO VERIFY GENERATOR SIZE PER SPEC SECTION 16210.
2. PROVIDE SERVICE ENTRANCE RATED 400A AUTOMATIC TRANSFER SWITCH PER SPEC SECTION 16250.
3. PANEL SHOWN WITH WEATHERPROOF DOORS REMOVED.
4. EXISTING WIRELESS REMOTE TERMINAL UNIT (WRTU) TO BE RELOCATED TO CP-LS-5. RELOCATE AND INSTALL (E) WRTU OMNI RM3 ANTENNA TO POLE MOUNT LOCATION PER DETAIL E/E042.

REGISTERED PROFESSIONAL ENGINEER WILLIAM P. CASSIDY No.17132 Exp.9-30-11 ELECTRICAL STATE OF CALIFORNIA 10/19/09

CONFORMED

SCALE	BAR IS ONE INCH AT FULL SCALE 0 — 1" IF NOT ONE INCH ON THIS SHEET SCALE ACCORDINGLY	DATE OCTOBER, 2009	DESIGNED MR	ECO:LOGIC ENGINEERS · CONSULTANTS	CITY OF COLFAX SEWAGE LIFT STATION IMPROVEMENTS & SEWER REHABILITATION©	LIFT STATION 5 SINGLE-LINE DIAGRAM AND PANEL ELEVATION	DRAWING NUMBER	SHEET NUMBER
NONE		FILE COLF09-006	DRAWN HAK				E015	63 OF 79
			CHECKED WPC	www.ecologic-eng.com				

FILE SIZE: 24X36 PLOT DATE: OCT 19, 2009 - 10:13AM
P:\COLF09-006\ACT\ELECTRICAL\COLF09-006 E015.dwg

REVISION	DESCRIPTION	BY	APP	CITY	DATE

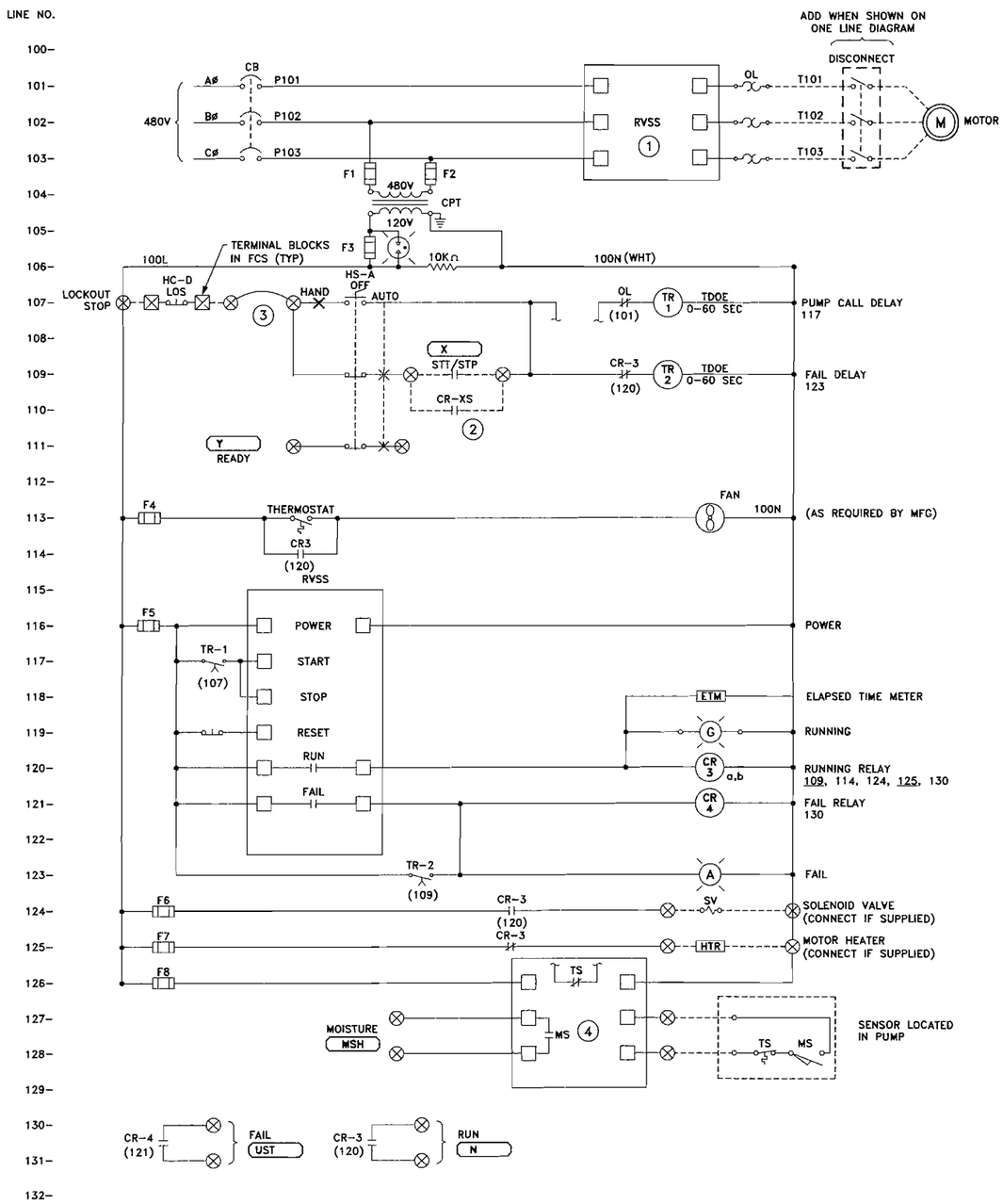

RVSS ELEMENTARY DIAGRAM (CONTROLLED FROM MCC) 5 A/E020

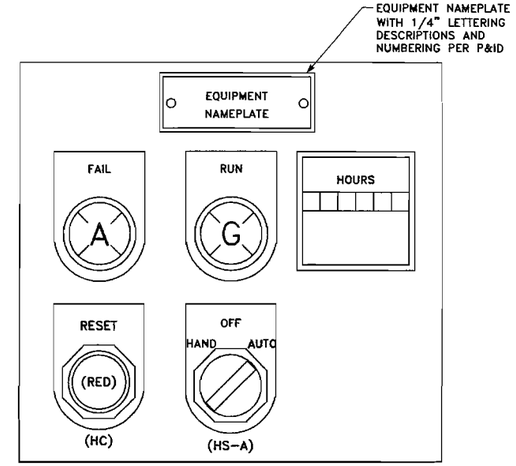

CONTROLS LAYOUT B/E020

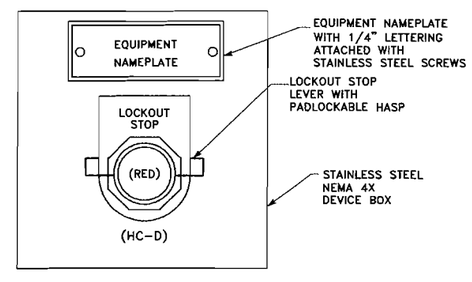

FIELD CONTROL STATION (FCS) C/E020

LOCATED AT EQUIPMENT

NOTES:

1. RVSS WITH BUILT-IN PHASE REVERSAL, PHASE LOSS, UNDER VOLTAGE AND OVERLOAD PROTECTION.
2. BACK UP CONTROLS PER P&ID.
3. REMOTE SHUTDOWN XS => LSLL, ZSHH, PSHH, ETC., PER P&ID, JUMPER IF NOT USED. THESE ARE TO BE CONTACTS OFF OF AUXILIARY RELAY CONTACTS LOCATED IN MCC CONTROL PANEL DRIVEN FROM FIELD DEVICE.
4. MOISTURE & OVER TEMPERATURE MODULE TO BE SUPPLIED BY PUMP MANUFACTURER & INSTALLED & WIRED BY MCC MANUFACTURER.
5. USE 100 SERIES NUMBERS FOR PUMP 1, 200 SERIES FOR PUMP 2, ETC.

REGISTERED PROFESSIONAL ENGINEER WILLIAM P. CASSITY No.17132 Exp.9-30-11 ELECTRICAL STATE OF CALIFORNIA 10/14/09

CONFORMED

SCALE	BAR IS ONE INCH AT FULL SCALE	DATE					
NONE	0 1" IF NOT ONE INCH ON THIS SHEET SCALE ACCORDINGLY	OCTOBER, 2009	DESIGNED MGB	ECO:LOGIC ENGINEERS · CONSULTANTS	CITY OF COLFAX SEWAGE LIFT STATION IMPROVEMENTS & SEWER REHABILITATION©	REDUCED VOLTAGE SOLID STATE (RVSS) ELEMENTARY DIAGRAM	DRAWING NUMBER E020
		FILE COLF09-006	DRAWN HAK	www.ecologic-eng.com			SHEET NUMBER 64 OF 79
			CHECKED WPC				

FILE SPEC: P:\COLF09-006\ACT\ELECTRICAL\COLF09-006 E020.dwg
PLOT DATE: Oct 19, 2009 - 10:34am

REVISION	DESCRIPTION	BY	APP	CITY	DATE

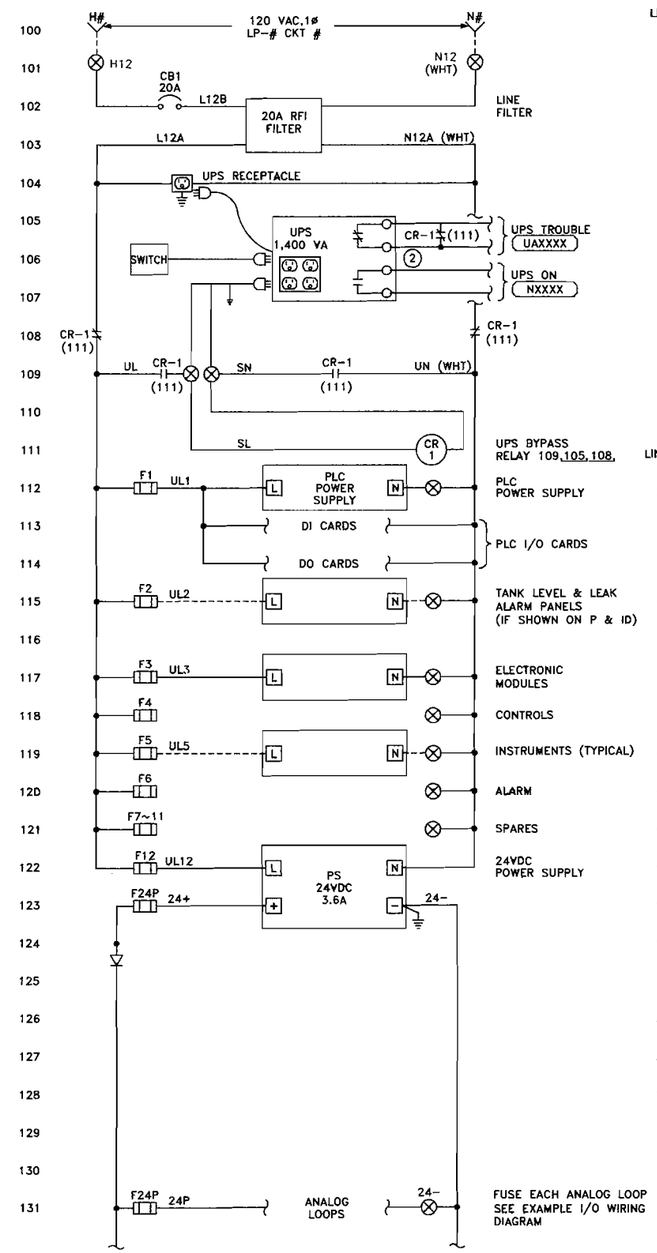

120 VAC TYPICAL POWER DISTRIBUTION DIAGRAM

A / E043 (1)

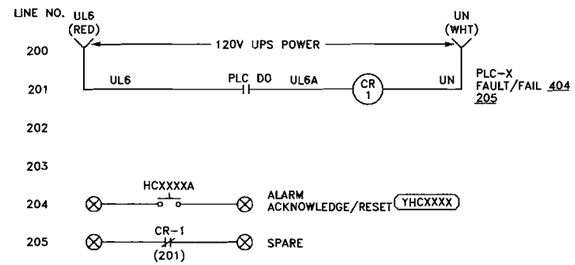

CP ALARM ELEMENTARY DIAGRAM

B / E043

NOTES: (1) WIRES & TERMINALS LABELED PER LOOP DIAGRAMS.
(2) ALARMS PER P & ID FOR EACH CONTROL PANEL

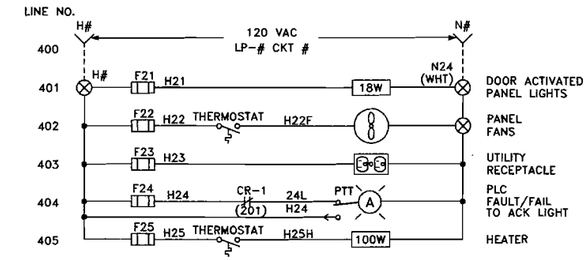

CP-TYPICAL UTILITY ELEMENTARY DIAGRAM

D / E043

NOTES: (1) SHOWN FOR ALL CONTROL PANELS SUPPLIED UNDER THIS CONTRACT

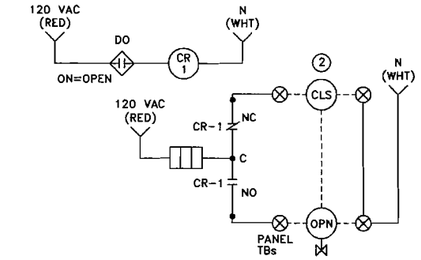

TYPICAL VALVE DIAGRAM

F / E043

NOTES: (1) CIRCUIT IS DIAGRAMMATIC & MEANT TO SHOW SHOW BASIC CIRCUIT FUNCTIONALITY'S.
(2) IF REQUIRED BY THE P & IDS ADD THIS TYPE OF CIRCUIT TO THE CP.

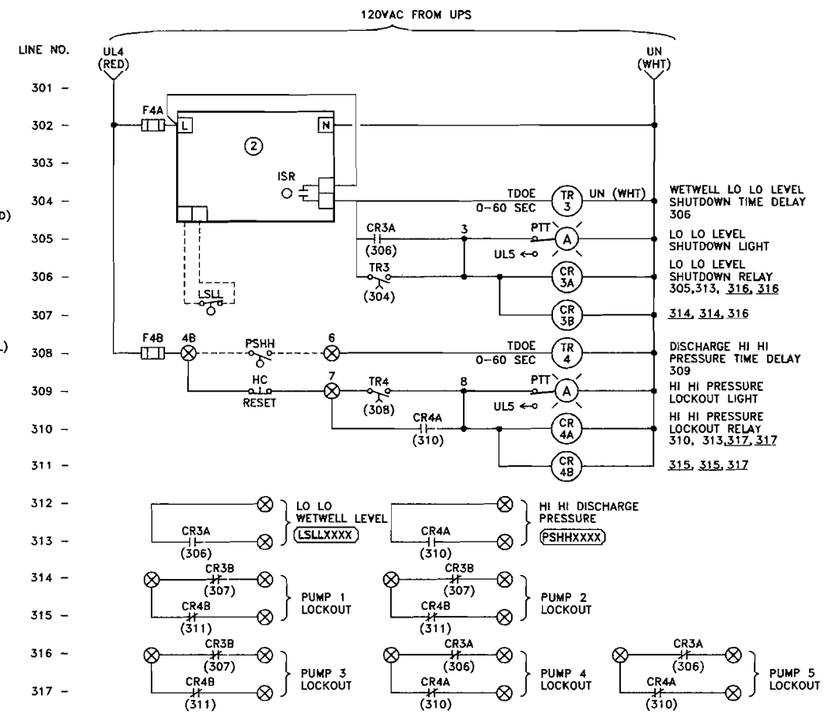

TYPICAL PUMP LOCKOUT ELEMENTARY DIAGRAM

C / E043 (3)

NOTES: (1) WIRES & TERMINALS LABELED PER LOOP DIAGRAMS.
(2) IF ISR IS REQUIRED PER P & ID, WIRE ALARM, WIRE TO THIS INPUT.
(3) PUMP LOCKED TO BE PROVIDED IF SHOWN ON P & ID.
(4) DIAGRAM SHOWN IS FOR TYPICAL PUMP CONTROLS. ADD HIGH LEVEL OR LO LO ALARMS AS SHOWN IN P & ID AND BASED ON THIS TEMPLATE.

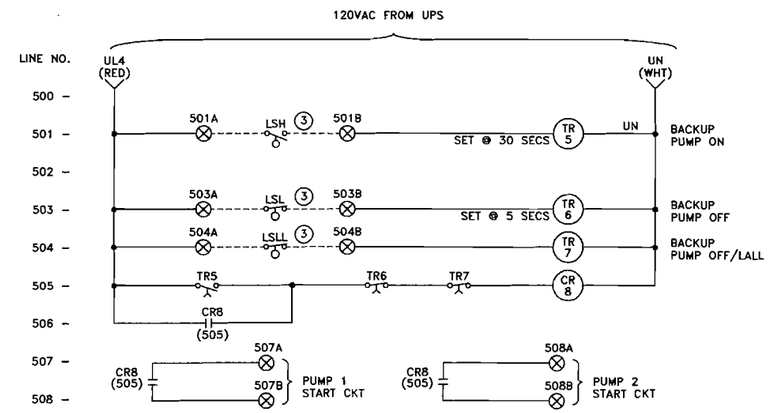

BACKUP LEVEL FLOAT CONTROL

E / E043

NOTES: (1) CIRCUIT IS DIAGRAMMATIC & MEANT TO SHOW BASIC CIRCUIT FUNCTIONALITY'S
(2) IF REQUIRED BY THE P & IDS ADD THIS TYPE OF CIRCUIT TO THE CP.
(3) IF ISR IS SHOWN ON P&ID ADD ISR RELAY TO CIRCUIT.

TYPICAL CONTROL PANEL ELEMENTARY DIAGRAMS-ALL

NOTES: (1) DISTRIBUTION DIAGRAM REPRESENTATIVE OF MAJOR COMPONENTS ONLY, ADDITION FUSES, CIRCUITS AND COMPONENT CONNECTIONS MAY BE REQUIRED FOR A FUNCTIONAL SYSTEM.
(2) PROVIDE & INSTALL INTERFACE RELAYS IF REQUIRED
(3) #-CKT # FROM LP PANEL (&). REFERENCE LP SCHEDULE FOR CIRCUIT NUMBERS.
(4) XXXX – TAGS PER P & ID DRAWINGS.
(5) WIRE NUMBERS SHOWN ARE AN EXAMPLE, ACTUAL WIRE NUMBERS SHALL BE DETERMINED BY THE SUPPLIER.
(6) PROVIDE SUFFICIENT TBS, FUSES & CBS TO ALLOW FOR ONLY 1 FIELD WIRE OR DEVICE PER TB, FUSE OR CB.

REGISTERED PROFESSIONAL ENGINEER WILLIAM P. CASSITY No.17132 Exp.9-30-10 ELECTRICAL STATE OF CALIFORNIA 12/10/09

CONFORMED

SCALE	BAR IS ONE INCH AT FULL SCALE	DATE	DESIGNED MR	ECO:LOGIC ENGINEERS · CONSULTANTS	CITY OF COLFAX SEWAGE LIFT STATION IMPROVEMENTS & SEWER REHABILITATION©	TYPICAL CONTROL PANEL CP ELEMENTARY DIAGRAM	DRAWING NUMBER	SHEET NUMBER
NONE	0 1" IF NOT ONE INCH ON THIS SHEET SCALE ACCORDINGLY	OCTOBER, 2009 FILE COLF09-006	DRAWN HAK CHECKED WPC	www.ecologic-eng.com			E043	69 OF 79

FILE SPEC: P:\COLF09-006\ACT\ELECTRICAL\COLF09-006 E043.dwg PLOT DATE: OCT 19, 2009 - 10:43am

REVISION	DESCRIPTION	BY	APP	CITY	DATE

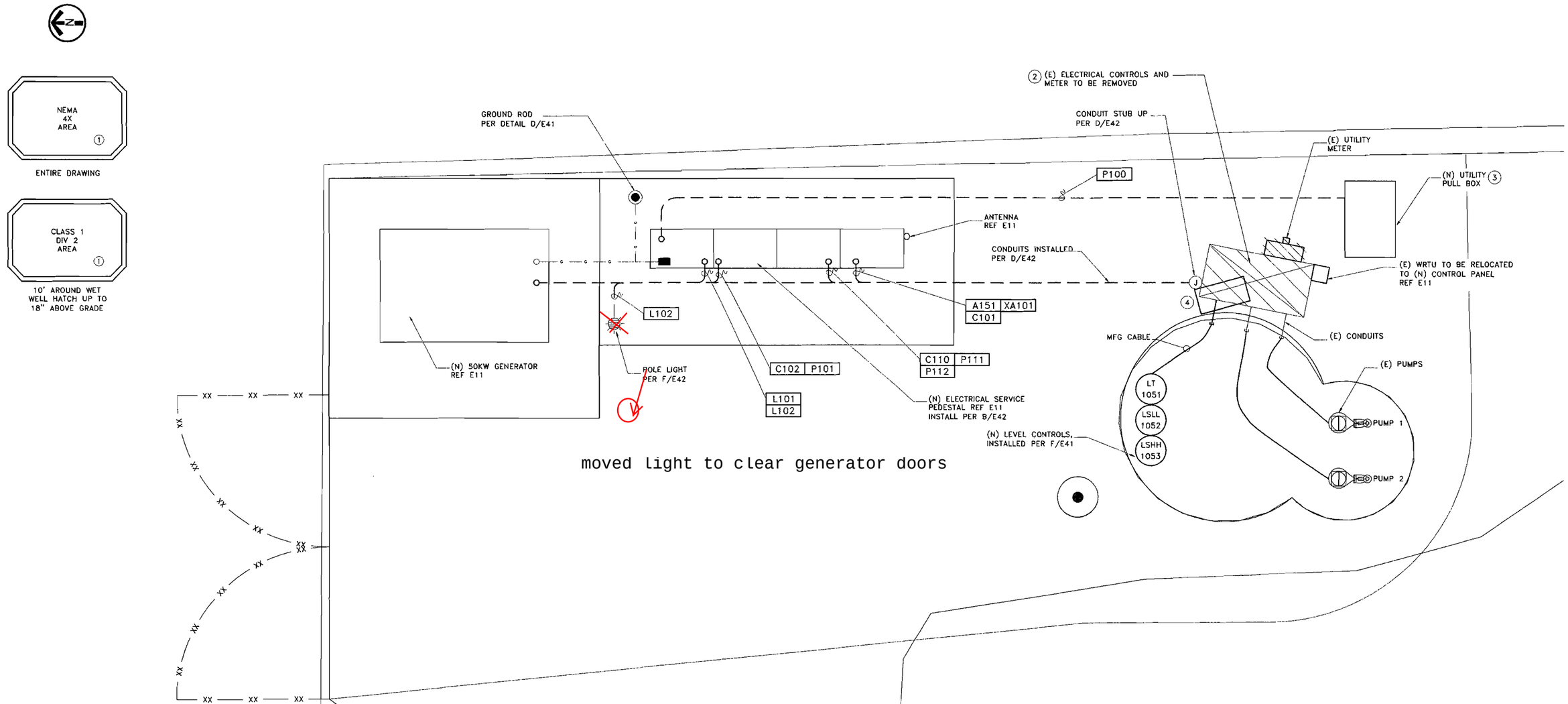

NOTES:

1. AREA CLASSIFICATION SHALL APPLY UNLESS SPECIFICALLY NOTED ON THE PLAN'S AND SPECIFICATIONS.
2. (E) ELECTRICAL CONTROL PANEL AND UTILITY SERVICE TO BE REMOVED. REPLACE WITH NEMA 4X ENCLOSURE MOUNTED ON EXISTING CONDUITS FROM WET WELL. PROVIDE TERMINAL STRIPS FOR (E) MOTOR LEADS AND CONTROL WIRING TO CONNECT TO (N) CONDUCTORS FROM (N) PEDESTAL. ENCLOSURE TO BE 36"WX18"HX8"D MIN. MOUNT ON DOUBLE SIDED UNISTRUT MIN 18" ABOVE (E) PAD.
3. NEW 24"X36" UTILITY PULL BOX PER UTILITY ENGINEERED DRAWINGS. INSTALL TO INTERCEPT (E) UTILITY SECONDARY CONDUIT FOR NEW UTILITY FEED TO (N) PEDESTAL. COORDINATE EXACT LOCATION WITH UTILITY CO.
4. 24"HX24"WX12"D MIN. INSTALL ISR'S & ISB PER P&ID IN SEPARATE NEMA 1 ENCLOSURE INSIDE SS JB. PROVIDE TERMINALS FOR MOTOR LEADS. MOUNT JB ON DOUBLE SIDED STAINLESS STEEL UNISTRUT MIN 18". PROVIDE GRS-PVC CONDUIT CHASES TO WET WELL ABOVE TOP OF WET WELL PROVIDE CONDUIT SEAL OFFS PER NEC.

					CONDUIT			GROUND	POWER		CONTROL		SIGNAL		
REV	PLAN DWG	CONDUIT	FROM	TO	QTY	SIZE	TYPE	WIRE	QTY	SIZE	QTY	SIZE	QTY	SIZE	REMARKS
	E100	A151	(N) METER/CONTROL PEDESTAL	(N) WW TERMINAL ENCLOSURE	1	1"	GRS-PVC	#12	-	-	-	-	1	#16TSPR	
	E100	C101	(N) METER/CONTROL PEDESTAL	(N) WW TERMINAL ENCLOSURE	1	1"	PVC-40	#12	-	-	6	#14	-	-	
	E100	C102	GENERATOR	ATS	1	1"	PVC-40	#12	-	-	6	#14	-		
	E100	C110	(N) METER/CONTROL PEDESTAL	(N) WW TERMINAL ENCLOSURE	1	1"	PVC-40	#12	-	-	8	#14	-	-	
	E100	L101	(N) METER/CONTROL PEDESTAL	GENERATOR	1	1"	PVC-40	#12	4	#10	-	-	-	-	
	E100	L102	(N) METER/CONTROL PEDESTAL	AREA LIGHT	1	1"	PVC-40	#12	2	#10	-	-	-	-	
	E100	P100	(N) UTILITY PULL BOX	(N) METER/CONTROL PEDESTAL	1	4"	PVC-40	-	-	-	-	-	-	-	PER UTILITY REQUIREMENTS/ENGINEERED DWG'S
	E100	P101	GENERATOR	ATS	1	2"	PVC-40	#4	3	1/0	-	-	-	-	
	E100	P111	(N) METER/CONTROL PEDESTAL	(N) WW TERMINAL ENCLOSURE	1	1"	PVC-40	#10	3	#8	-	-	-	-	
	E100	P112	(N) METER/CONTROL PEDESTAL	(N) WW TERMINAL ENCLOSURE	1	1"	PVC-40	#10	3	#8	-	-	-	-	
	E100	XA101	(N) METER/CONTROL PEDESTAL	(N) WW TERMINAL ENCLOSURE	1	1"	GRS-PVC	-	-	-	-	-	-	-	PULL ROPE

REGISTERED PROFESSIONAL ENGINEER WILLIAM P. CASSITY No.17132 Exp.9-30-11 ELECTRICAL STATE OF CALIFORNIA 10/19/09

CONFORMED

SCALE	BAR IS ONE INCH AT FULL SCALE	DATE	DESIGNED MR	ECO:LOGIC ENGINEERS · CONSULTANTS	CITY OF COLFAX SEWAGE LIFT STATION IMPROVEMENTS & SEWER REHABILITATION©	LIFT STATION 1 ELECTRICAL PLAN	DRAWING NUMBER	SHEET NUMBER
1" = 2'	0 1" IF NOT ONE INCH ON THIS SHEET SCALE ACCORDINGLY	OCTOBER, 2009	DRAWN HAK	www.ecologic-eng.com			E100	70 OF 79
		FILE COLF09-006	CHECKED WPC					

FILE SPEC: P:\COLF09-006\ACAD\ELECTRICAL\COLF09-006 E100.dwg
PLOT DATE: 10/19/2009 10:12am

REVISION	DESCRIPTION	BY	APP	CITY	DATE
1	ADDENDUM NO. 2	ASB	WPC		1/10

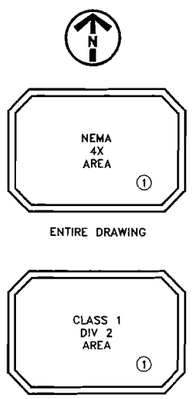

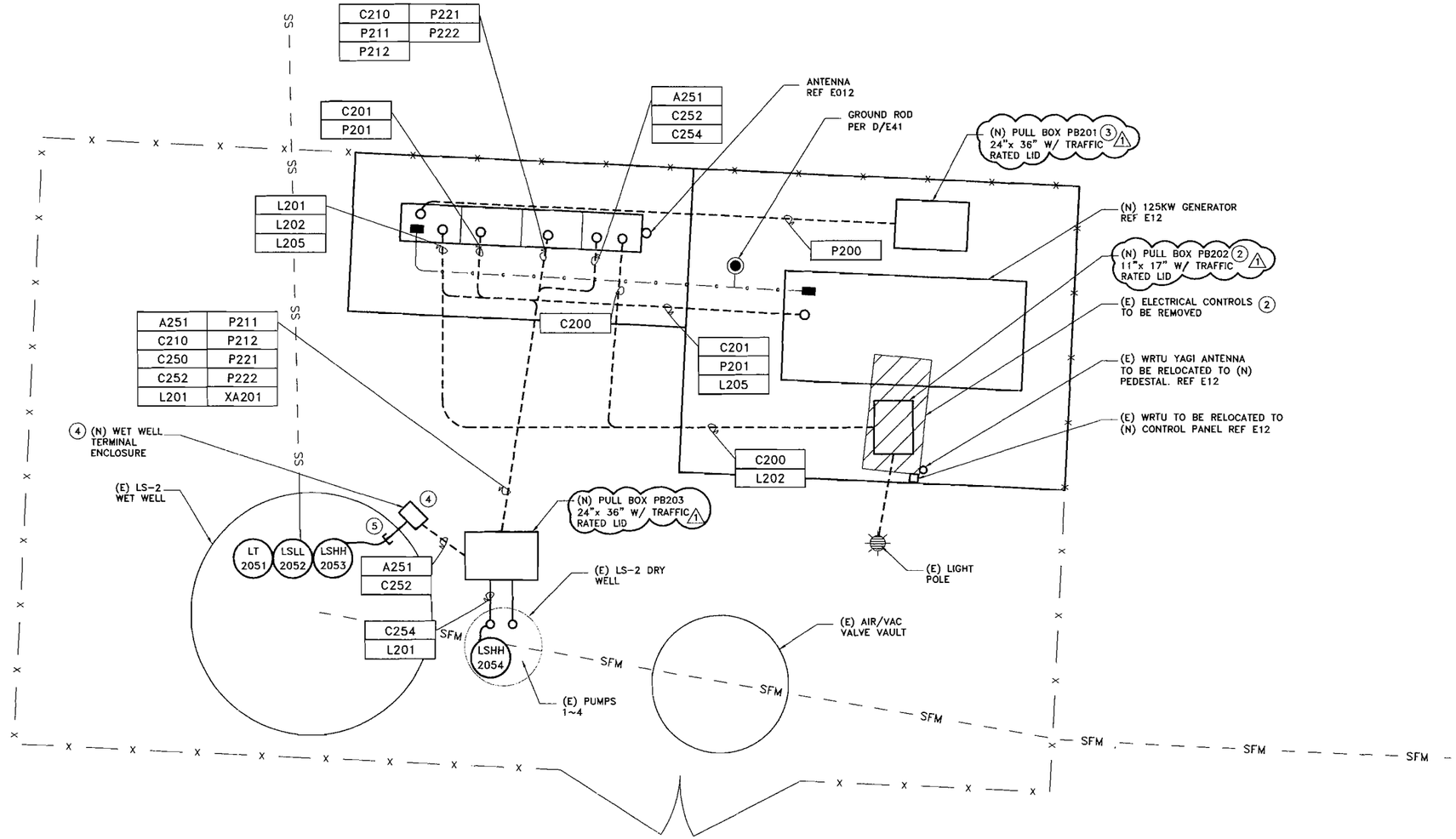

NOTES:

1. AREA CLASSIFICATION SHALL APPLY UNLESS SPECIFICALLY NOTED ON THE PLANS AND SPECIFICATIONS.
2. (E) CONTROL PANEL TO BE REMOVED. REPLACE WITH (N) PULL BOX MOUNTED ON EXISTING CONDUITS. PROVIDE TERMINAL STRIPS FOR (E) LIGHTING CIRCUITS TO CONNECT TO (N) CONDUCTORS FROM (N) LP-LS-2. VERIFY LOCATION OF (E) HIGH WET WELL LEVEL LOCKOUT CONTROL WIRING FROM LS-2 TO LS-1, INSTALL ADDITIONAL (N) PULL BOX IF NEEDED, AND INTERCEPT (E) WIRES TO REROUTE TO (N) CP-LS-2.
3. VERIFY LOCATION OF (E) FEEDERS FROM EXISTING REMOTE METER/MAIN. INSTALL (N) PULL BOX, AND INTERCEPT (E) WIRES TO REROUTE TO (N) PEDESTAL.
4. 24"HX24"WX12"D MIN. INSTALL ISR'S & ISB PER P&ID IN SEPARATE NEMA 1 ENCLOSURE INSIDE SS JB. PROVIDE TERMINALS FOR MOTOR LEADS. MOUNT JB ON DOUBLE SIDED STAINLESS STEEL UNISTRUT MIN 18". PROVIDE GRS-PVC CONDUIT CHASES TO WET WELL ABOVE TOP OF WET WELL PROVIDE CONDUIT SEAL OFFS PER NEC.
5. CORE DRILL THROUGH WALL FOR CONDUIT ROUTING. SEAL AROUND PENETRATION WITH NON-SHRINK GROUT.
6. (N) CONDUITS INSTALLED PER DETAIL A/E041. INCLUDE AWG #2/0 BARE COPPER GROUND WIRE FROM SYSTEM GROUND TO PUMP DRY WELL ENCLOSURE.

					CONDUIT			GROUND	POWER		CONTROL		SIGNAL		
REV	PLAN DWG	CONDUIT	FROM	TO	QTY	SIZE	TYPE	WIRE	QTY	SIZE	QTY	SIZE	QTY	SIZE	REMARKS
	E200	A251	(N) CONTROL PEDESTAL	(N) WW TERMINAL ENCLOSURE	1	1"	GRS-PVC	#12	-	-	-	-	1	#16TSPR	
	E200	C200	(N) CONTROL PEDESTAL	(N) PB202	1	1"	PVC-40	#12	-	-	2	#14	-	-	INTERCEPT LS-2 LSHH LOCKOUT WIRING TO LS-1
	E200	C201	GENERATOR	ATS	1	1"	PVC-40	#12	-	-	2	#14	-	-	
	E200	C210	(N) CONTROL PEDESTAL	DRY WELL VIA PB203	1	1"	PVC-40	#12	-	-	24	#14	-	-	PMP2011,12,21,22
	E200	C252	(N) CONTROL PEDESTAL	WET WELL	1	1"	GRS-PVC	#12	-	-	4	#14	-	-	LSLL2052, LSHH2053
	E200	C254	(N) CONTROL PEDESTAL	DRY WELL	1	1"	PVC-40	#12	-	-	2	#14	-		LEVEL SWITCH LSHH2054
	E200	L201	(N) CONTROL PEDESTAL	DRY WELL VIA PB203	1	1"	PVC-40	#12	6	#10	-	-	-	-	
	E200	L202	(N) CONTROL PEDESTAL	PB202	1	1"	PVC-40	#12	2	#12	-	-	-	-	INTERCEPT EXISTING LIGHT POLE CIRCUIT
	E200	L205	(N) CONTROL PEDESTAL	GENERATOR	1	1"	PVC-40	#12	4	#10	-	-	-	-	INTERCEPT EXISTING LIGHT POLE CIRCUIT
	E200	P200	PB201	ATS	1	2-1/2"	PVC-40	#2	3	4/0	-	-	-	-	MATCH EXISTING FEEDERS
	E200	P201	GENERATOR	ATS	1	2-1/2"	PVC-40	#2	3	2/0	-	-	-	-	
	E200	P211	(N) CONTROL PEDESTAL	DRY WELL	1	1"	PVC-40	#10	3	#8	-	-	-	-	
	E200	P212	(N) CONTROL PEDESTAL	DRY WELL	1	1"	PVC-40	#10	3	#8	-	-	-	-	
	E200	P221	(N) CONTROL PEDESTAL	DRY WELL	1	1"	PVC-40	#10	3	#8	-	-	-	-	
	E200	P222	(N) CONTROL PEDESTAL	DRY WELL	1	1"	PVC-40	#10	3	#8	-	-	-	-	
	E200	XA201	(N) CONTROL PEDESTAL	(N) PB203	1	1"	GRS-PVC	-	-	-	-	-	-	-	PULL ROPE
1	E200	C250	(N) CONTROL PEDESTAL	(N) PB203	1	1"	PVC-40	#12	6	#14	–	–	–	–	

REGISTERED PROFESSIONAL ENGINEER
WILLIAM P. CASSITY
No.17132
Exp.9-30-11
ELECTRICAL
STATE OF CALIFORNIA
1/12/10

CONFORMED

SCALE	BAR IS ONE INCH AT FULL SCALE	DATE	DESIGNED MR	ECOLOGIC ENGINEERS · CONSULTANTS	CITY OF COLFAX	LIFT STATION 2	DRAWING NUMBER	SHEET NUMBER
3/8"=1'-0"	0 1" IF NOT ONE INCH ON THIS SHEET SCALE ACCORDINGLY	OCTOBER, 2009	DRAWN HAK	www.ecologic-eng.com	SEWAGE LIFT STATION IMPROVEMENTS & SEWER REHABILITATION©	ELECTRICAL PLAN	E200	71 OF 79
		FILE COLF09-006	CHECKED WPC					

FILE SPEC: P:\COLF09-006\ACT\ELECTRICAL\COLF09-006 E200.dwg
PLOT DATE: Jan 12, 2010 - 1:47pm

REVISION	DESCRIPTION	BY	APP	CITY	DATE
1	ADDENDUM NO. 2	ASB	WPC		1/10

REV	PLAN DWG	CONDUIT	FROM	TO	CONDUIT QTY	CONDUIT SIZE	TYPE	GROUND WIRE	POWER QTY	POWER SIZE	CONTROL QTY	CONTROL SIZE	SIGNAL QTY	SIGNAL SIZE	REMARKS
	E300	A351	(N) METER/CONTROL PEDESTAL	(N) WW TERMINAL ENCLOSURE	1	1"	GRS-PVC	#12	-	-	-	-	1	#16TSPR	
	E300	C301	(N) METER/CONTROL PEDESTAL	(N) WW TERMINAL ENCLOSURE	1	1"	PVC-40	#12	-	-	4	#14	-	-	
	E300	C302	GENERATOR	ATS	1	1"	PVC-40	#12	-	-	6	#14	-		
	E300	C310	(N) METER/CONTROL PEDESTAL	(N) WW TERMINAL ENCLOSURE	1	1"	PVC-40	#12	-	-	8	#14	-	-	
	E300	L301	(N) METER/CONTROL PEDESTAL	GENERATOR	1	1"	PVC-40	#12	4	#10	-	-	-	-	
	E300	L302	(N) METER/CONTROL PEDESTAL	AREA LIGHT	1	1"	PVC-40	#12	2	#12	-	-	-	-	
	E300	P301	GENERATOR	ATS	1	2"	PVC-40	#4	3	1/0	-	-	-	-	
	E300	P311	(N) METER/CONTROL PEDESTAL	(N) WW TERMINAL ENCLOSURE	1	1"	PVC-40	#10	3	#8	-	-	-	-	
	E300	P312	(N) METER/CONTROL PEDESTAL	(N) WW TERMINAL ENCLOSURE	1	1"	PVC-40	#10	3	#8	-	-	-	-	
	E300	XA301	(N) METER/CONTROL PEDESTAL	(N) WW TERMINAL ENCLOSURE	1	1"	GRS-PVC	-	-	-	-	-	-	-	PULL ROPE
1	E300	P300	(N) UTILITY INSTALLED POLE	(N) PEDESTAL	1	4"	PVC-80	–	–	–	–	–	–	–	PULL ROPE

NEMA 4X AREA (1)

ENTIRE DRAWING

CLASS 1 DIV 2 AREA (1)

10' AROUND WET WELL HATCH UP TO 18" ABOVE GRADE

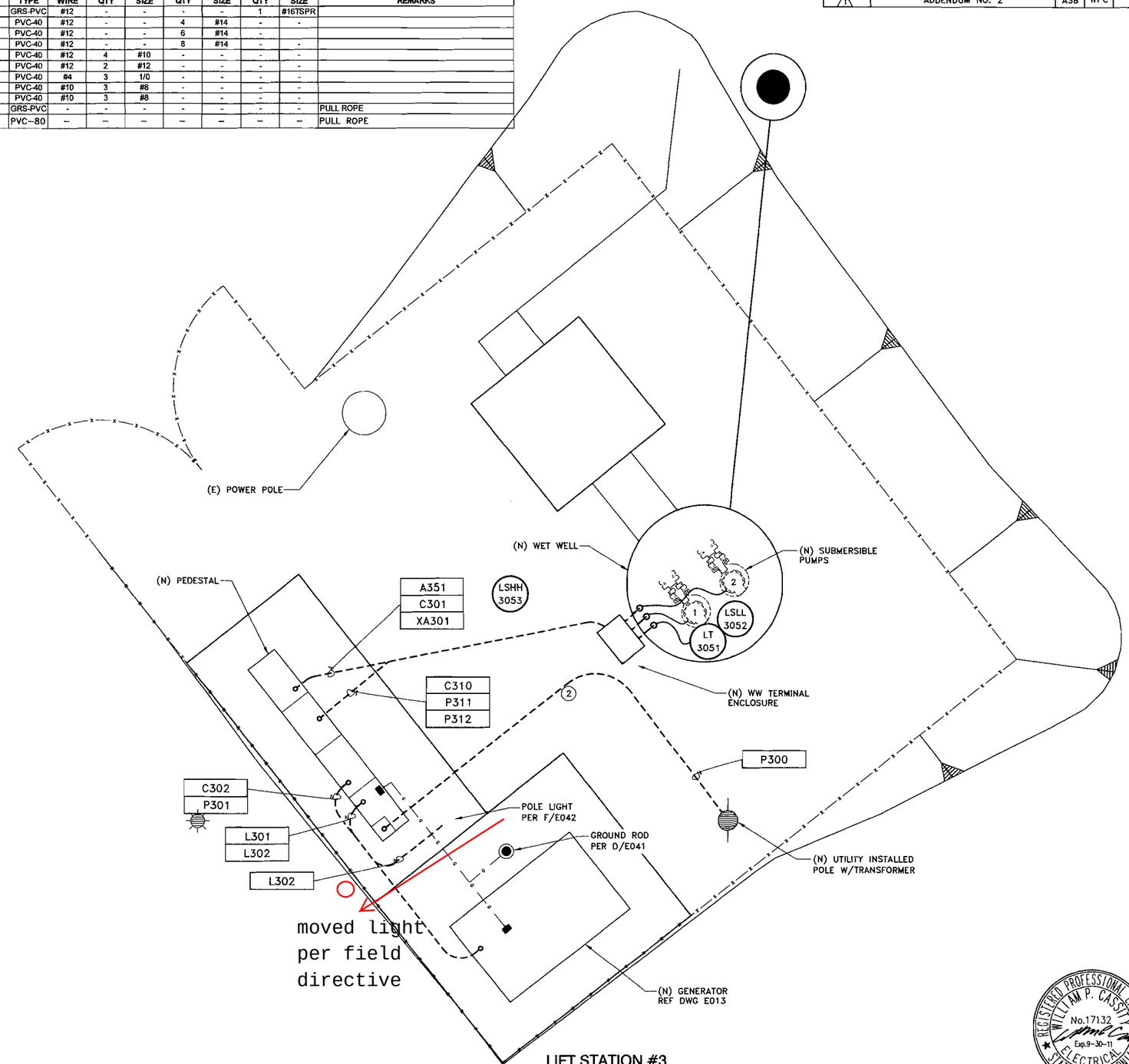

NOTES:

1. AREA CLASSIFICATION SHALL APPLY UNLESS SPECIFICALLY NOTED ON THE PLAN'S AND SPECIFICATIONS.
2. 24"HX24"WX12"D MIN. INSTALL ISR'S & ISB PER P&ID IN SEPARATE NEMA 1 ENCLOSURE INSIDE SS JB. PROVIDE TERMINALS FOR MOTOR LEADS. MOUNT JB ON DOUBLE SIDED STAINLESS STEEL UNISTRUT MIN 18". PROVIDE GRS-PVC CONDUIT CHASES TO WET WELL ABOVE TOP OF WET WELL PROVIDE CONDUIT SEAL OFFS PER NEC.
3. NOT USED.
4. (N) CONDUITS INSTALLED PER DETAIL A/E041.

LIFT STATION #3
ELECTRICAL PLAN

SCALE: 3/8"=1'-0"

CONFORMED

REGISTERED PROFESSIONAL ENGINEER WILLIAM P. CASSIDY No.17132 Exp.9-30-11 ELECTRICAL STATE OF CALIFORNIA 1/12/10

SCALE	BAR IS ONE INCH AT FULL SCALE	DATE	DESIGNED	ECO:LOGIC ENGINEERS · CONSULTANTS	CITY OF COLFAX SEWAGE LIFT STATION IMPROVEMENTS & SEWER REHABILITATION©	LIFT STATION 3 ELECTRICAL PLAN	DRAWING NUMBER	SHEET NUMBER
3/8"=1'-0"	0 1" IF NOT ONE INCH ON THIS SHEET SCALE ACCORDINGLY	OCTOBER, 2009	MR	www.ecologic-eng.com			E300	72 OF 79
		FILE COLF09-006	DRAWN HAK					
			CHECKED WPC					

FILE SPEC: P:\COLF09-006\ACT\ELECTRICAL\COLF09-006 E300.dwg
PLOT DATE: JAN 12, 2010 - 1:46pm

REVISION	DESCRIPTION	BY	APP	CITY	DATE
1	ADDENDUM NO. 2	ASB	WPC		1/10

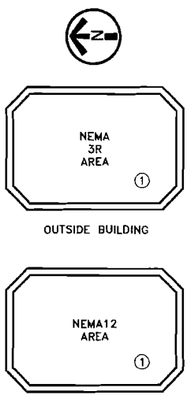

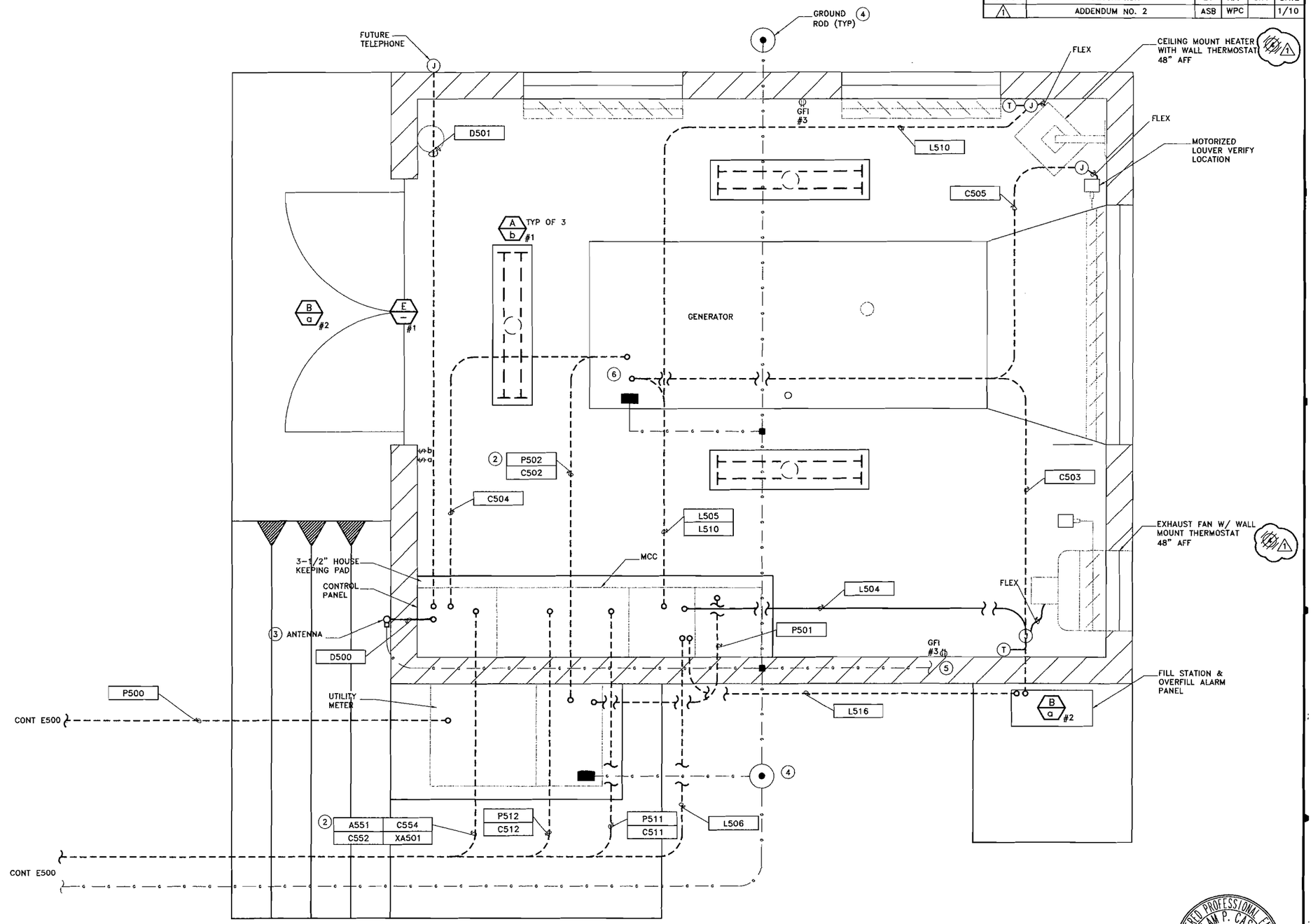

NOTES:

1. AREA CLASSIFICATION SHALL APPLY UNLESS SPECIFICALLY NOTED ON THE PLAN'S AND SPECIFICATIONS.
2. BURIED CONDUITS INSTALLED PER A,B/E41.
3. ANTENNA INSTALLED PER E/E42. PROVIDE ROOF JACK IF ROOF PENETRATION IS NECESSARY.
4. GROUND ROD INSTALLED PER D/E41.
5. PROVIDE MINIMUM OF 20FT OF #2/0 CU IN BUILDING FOOTING PER C/E42.
6. CONDUIT STUB UPS PER D/E42.
7. LIGHTING CONDUITS NOT SHOWN. REFERENCE E40 FOR GENERAL NOTES REGARDING LIGHTING CONDUITS AND LIGHTING FIXTURE SCHEDULE.

REGISTERED PROFESSIONAL ENGINEER
WILLIAM P. CASSIDY
No.17132
Exp.9-30-11
ELECTRICAL
STATE OF CALIFORNIA
1/12/10

CONFORMED

SCALE	BAR IS ONE INCH AT FULL SCALE	DATE	DESIGNED MB	ECO:LOGIC ENGINEERS · CONSULTANTS	CITY OF COLFAX	LIFT STATION 5 BUILDING ELECTRICAL PLAN	DRAWING NUMBER	SHEET NUMBER
3/4"=1'-0"	0 1" IF NOT ONE INCH ON THIS SHEET SCALE ACCORDINGLY	OCTOBER, 2009	DRAWN HAK	www.ecologic-eng.com	SEWAGE LIFT STATION IMPROVEMENTS & SEWER REHABILITATION©		E501	74 OF 79
		FILE COLF09-006	CHECKED WPC					

FILE SPEC: P:\COLF09-006\ACT\ELECTRICAL\COLF09-006 E501.dwg
PLOT DATE: Jan 12, 2010 - 1:45pm

REVISION	DESCRIPTION	BY	APP	CITY	DATE

SYMBOLS LIST

SYMBOL	DESCRIPTION
	GROUND
X	SHEET NOTE TAG
XXX	FIELD MOUNTED INSTRUMENT
XXX / XXX	FACE MOUNTED INSTRUMENT ON LOCAL PANEL, OPERATOR ACCESSIBLE
XXX / XXX	INSTRUMENT MOUNTED IN LOCAL PANEL, OPERATOR INACCESSIBLE
XXX / XXX	FACE MOUNTED INSTRUMENT ON FIELD PANEL, OPERATOR ACCESSIBLE
XXX / XXX	INSTRUMENT MOUNTED IN FIELD PANEL, OPERATOR INACCESSIBLE
ETM	ELAPSED TIME METER
i DWG#	OPERATION PERFORMED WITH LOGIC OR HARDWIRED DEVICES – REFERENCE ELEMENTARY DWG. #
X	LAMP INDICATION (STATUS OR ALARM)
R#–C#	ANNUNCIATOR WINDOW R – ROW # C – COLUMN #
XX / X	COMMUNICATIONS POINT
XXXXX	DISCRETE INPUT
	DISCRETE OUTPUT
	ANALOG INPUT
	ANALOG OUTPUT
FY	INSTRUMENT PANEL MOUNTED WITH COMPUTING, CONVERTING FUNCTION

CONVERT
- E – VOLTAGE
- I – CURRENT
- P – PNEUMATIC
- A – ANALOG
- B – BINARY
- H – HYDRAULIC
- O – ELECTROMAGNETIC, SONIC
- R – RESISTANCE (ELECT.)
- D – DIGITAL

COMPUTE
- SUMMING Σ
- SUBTRACTOR –
- MULTIPLYING X
- DIVIDING ÷
- ROOT EXTRACTION √
- PROPORTIONAL P
- DERIVITIVE D
- AVERAGING Σ/n
- RATIO 1:1
- DIFFERENCE Δ
- HIGH SELECTING >
- LOW SELECTING <
- INTEGRAL I
- INTERLOCK

SYMBOL	DESCRIPTION
XXXX	VALVE/GATE NUMBER
XXXXX	EQUIPMENT NUMBER
XXX / XXX	PLC OR COMPUTER FUNCTION PERFORMING OPERATION WITH VISUAL INDICATION
XXX / XXX	PLC OR COMPUTER FUNCTION PERFORMING OPERATION WITH VISUAL ALARM INDICATION
XXX / XXX	PLC OR COMPUTER PERFORMING INTERNAL OPERATION
XXX / XXX	PLC OR COMPUTER PERFORMING INTERNAL ALARM OPERATION
#	AUTODIALER PRIORITY # PC BASED SOFTWARE

SYMBOL	DESCRIPTION
	HARDWIRE CONNECTION
	EXISTING ELECTRIC SIGNAL
	ELECTRICAL SIGNAL
	ELECTRIC POWER/CONTROL
#	PNEUMATIC SIGNAL
	CAPILLARY TUBING (FILLED SYSTEM)
	HYDRAULIC SIGNAL
ES AS	SONIC OR ELECTROMAGNETIC SIGNAL
	LOGIC OR DATA SIGNAL
	MAIN PROCESS LINE
	SECONDARY PROCESS LINE
	AUXILIARY PROCESS LINE
	DIRECTION OF FLOW
	MANUFACTURER'S PRE–WIRING
ES AS	ELECTRIC SUPPLY OR AIR SUPPLY
M	MOTOR
	CENTRIFUGAL PUMP
	BLOWER OR FAN
	COMPRESSOR
	SUBMERSIBLE PUMP
	VERTICAL PUMP
	ROTARY LOBE OR GEAR PUMP
	METERING PUMP
	MIXER
	PROGRESSIVE CAVITY PUMP
SV	SOLENOID VALVE
	AUDIBLE ALARM (BUZZER OR HORN)
D	DRAIN
12	PAGE THAT LINE IS CONTINUED ON
	REDUCER
	BLIND FLANGED END
	CAPPED END
	TELEPHONE

SYMBOL	DESCRIPTION
	DIAPHRAGM VALVE
	VALVE ACTUATOR
P	VALVE POSITIONER
	GLOBE VALVE
	GATE VALVE OR PINCH VALVE (NORMALLY OPEN)
	GATE VALVE OR PINCH VALVE (NORMALLY CLOSED)
	PLUG VALVE (NORMALLY OPEN)
	PLUG VALVE (NORMALLY CLOSED)
	BALL VALVE (NORMALLY OPEN)
	BALL VALVE (NORMALLY CLOSED)
	BALL CHECK VALVE
	BUTTERFLY VALVE
	CHECK VALVE
	SLUICE GATE (NORMALLY OPEN)
	SLUICE GATE (NORMALLY CLOSED)
	SLIDE GATE (NORMALLY OPEN)
	SLIDE GATE (NORMALLY CLOSED)
	VACUUM RELIEF VALVE
	PRESSURE RELIEF VALVE
	DIAPHRAGM SEAL
	PULSATION DAMPENER
	PRESSURE REDUCING VALVE
	QUICK CONNECT W/CHECK
	ARV
M	MAGNETIC FLOW METER
X" MAG	MAGNETIC FLOW TUBE

ABBREVIATIONS

A	AMPERES, AMBER	MIN	MINIMUM
AC	ALTERNATING CURRENT	MOA	MANUAL–OFF–AUTO
ACU	AIR CONDITIONING UNIT	MOT	MOTOR OVERTEMP SENSOR
ADR	AIR DRYER	MOV	MOTOR OPERATED VALVE
AER	AERATOR	MTU	MODULAR TREATMENT UNIT
AGR	AGITATOR	MUX	MULTIPLEXER
AI	ANALOG INPUT	MWR	MOTORIZED WEIR
AO	ANALOG OUTPUT	MXR	MIXER
B	BLUE	N	NEUTRAL
BLR	BLOWER	NC	NORMALLY CLOSED
C	CLOSE, CONTROL	NO	NORMALLY OPEN
CFE	CLEARWELL FILTER EFFLUENT	O	OPEN
CLR	CLARIFIER	O/O	ON–OFF
CMP	COMPRESSOR	OAC	OPEN–AUTO–CLOSE
CR	CONTROL RELAY	OCA	OPEN–CLOSE–AUTO
CTF	CENTRIFUGE	PB	PUSHBUTTON
d	DIFFERENTIAL	pH	HYDROGEN ION CONCENTRATION
DC	DIRECT CURRENT	PID	PROPORTIONAL – INTEGRAL – DERIVATIVE
(DDM)	DIGITAL DISPLAY MODULE	PLC	PROGRAMMABLE LOGIC CONTROLLER
DI	DIGITAL INPUT	PMP	PUMP
DO	DIGITAL OUTPUT	PNL	PANEL
DPDT	DOUBLE POLE DOUBLE THROW	POT	POTENTIOMETER
DRV	DRIVE	POV	PNEUMATIC OPERATED VALVE
(E)	EXISTING	PS	PRESSURE SWITCH
ETM	ELAPSED TIME METER	PRV	PRESSURE RELIEF VALVE
(F)	FUTURE	PTT	PUSH TO TEST
FAN	FAN	PV	PROCESS VARIABLE
FC	FAIL CLOSED	R	RED
FE	FLOW METER ELEMENT	(R)	EXISTING TO BE REMOVED OR RELOCATED
FLC	FLOCCULATOR	REF	REFERENCE
FLP	FAIL LAST POSITION	RVSS	REDUCED VOLTAGE SOLID STATE
FLT	FILTER	S	SWITCH
FO	FAIL OPEN	(SIM)	SIGNAL INPUT MODULE
FS	FLOAT SWITCH	SCR	SILICON CONTROLLED RECTIFIER
G	GREEN	(SOM)	SIGNAL OUTPUT MODULE
G, GND	GROUND	SMP	TYPICAL
GNR	MACERATOR/GRINDER	SP	SET POINT
HMI	HUMAN MACHINE INTERFACE	SS	SURGE SUPPRESSOR
HP AIR	HIGH PRESSURE AIR	TDD, TDE	TIME DELAY RELAY
HOA	HAND–OFF–AUTO	TWP	TWISTED PAIR
HOG	HYDRAULIC OPERATED GATE	TWSP	TWISTED SHIELDED PAIR
I	INTERLOCK	TYP	TYPICAL
I/O	INPUT/OUTPUT	UVC	ULTRAVIOLET CHANNEL
ISR	INTRINSICALLY SAFE RELAY	V	VOLTS, VOLTAGE
LOR	LOCAL/OFF/REMOTE	VFD	VARIABLE FREQUENCY DRIVE
LOS	LOCK–OUT STOP	VLV	VALVE
LP AIR	LOW PRESSURE AIR		
mA	MILLIAMPERES		

NUMBERING SEQUENCE

SEQUENCE NUMBER	DESCRIPTION
00	COMMON ALARM
01–09	INDIVIDUAL ITEMS
10	NONE
20	NONE
30	NONE
40	NONE
50	LEVEL DEVICES
60	PRESSURE DEVICES
70	FLOW DEVICES
80	ANALYTICAL DEVICES
90	SAFETY & SECURITY DEVICES

P & I DIAGRAM INSTRUMENT FUNCTIONAL IDENTIFICATION

CODE LETTER	FIRST LETTER(S)		SUCCEEDING LETTER(S)		
	MEASURED OR INITIATING VARIABLE	MODIFIER	READOUT OR PASSIVE FUNCTION	OUTPUT FUNCTION	MODIFIER
A	ANALYSIS		ALARM		AUTO
B	BURNER FLAME				
C	CHLORINE			CONTROL	CLOSE
D	DENSITY	DIFFERENTIAL	DIRECTION		
E	VOLTAGE		ELEMENT, SENSOR		
F	FLOW		FUEL		FAILURE
G	GAGING		VIEWING DEVICE		
H	HAND				HIGH/HAND
I	CURRENT		INDICATE		
J	POWER	SCAN			
K	TIME	TIME RATE OF CHANGE		CONTROL STATION	
L	LEVEL		PILOT LIGHT		LOW/LOCAL
M	MOISTURE/MOTOR	MOMENTARY	MOTOR		MIDDLE/MANUAL
N	STATUS				
O	OPERATOR		ORIFICE		OPEN/OVERLOAD
P	PRESSURE		POINT		
Q	EVENT	TOTALIZE	TOTAL		
R	RESET	RATIO	RECORD		RUNNING/REMOTE
S	SPEED	SAFETY		SWITCH	STOP/SPEED
T	TEMPERATURE		TEST	TRANSMIT	
U	MULTIVARIABLE		MULTIFUNCTION		
V	VIBRATION/VALVE			VALVE	
W	FORCE, WEIGHT		WELL		
X	TELEMETRY INTERFACE				
Y	COMPUTER INTERFACE			COMPUTE/RELAY/CONVERTER	
Z	POSITION			ACTUATE	POSITION

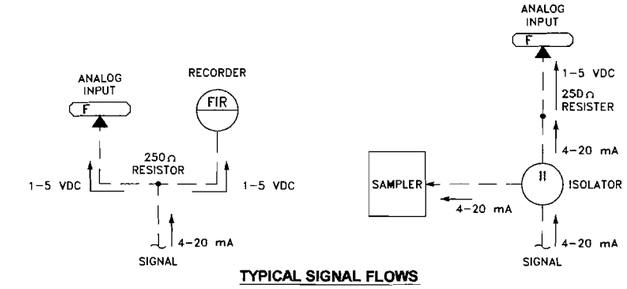

TYPICAL SIGNAL FLOWS

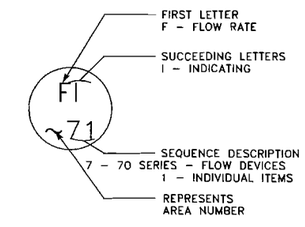

P&ID INSTRUMENT IDENTIFICATION EXAMPLE

REGISTERED PROFESSIONAL ENGINEER WILLIAM P. CASSITY No.17132 Exp.9-30-11 ELECTRICAL STATE OF CALIFORNIA
10/19/09

CONFORMED

SCALE	BAR IS ONE INCH AT FULL SCALE	DATE	DESIGNED MR	ECO:LOGIC ENGINEERS · CONSULTANTS	CITY OF COLFAX SEWAGE LIFT STATION IMPROVEMENTS & SEWER REHABILITATION©	INSTRUMENTATION SYMBOLS & ABBREVIATIONS	DRAWING NUMBER	SHEET NUMBER
NONE	0 1" IF NOT ONE INCH ON THIS SHEET SCALE ACCORDINGLY	OCTOBER, 2009	DRAWN HAK	www.ecologic-eng.com			I001	75 OF 79
		FILE COLF09-006	CHECKED WPC					

FILE SPEC: P:\COLF09-006\ACT\ELECTRICAL\COLF09-006 I001.dwg
PLOT DATE: Oct 19, 2009 - 11:00am

REVISION	DESCRIPTION	BY	APP	CITY	DATE

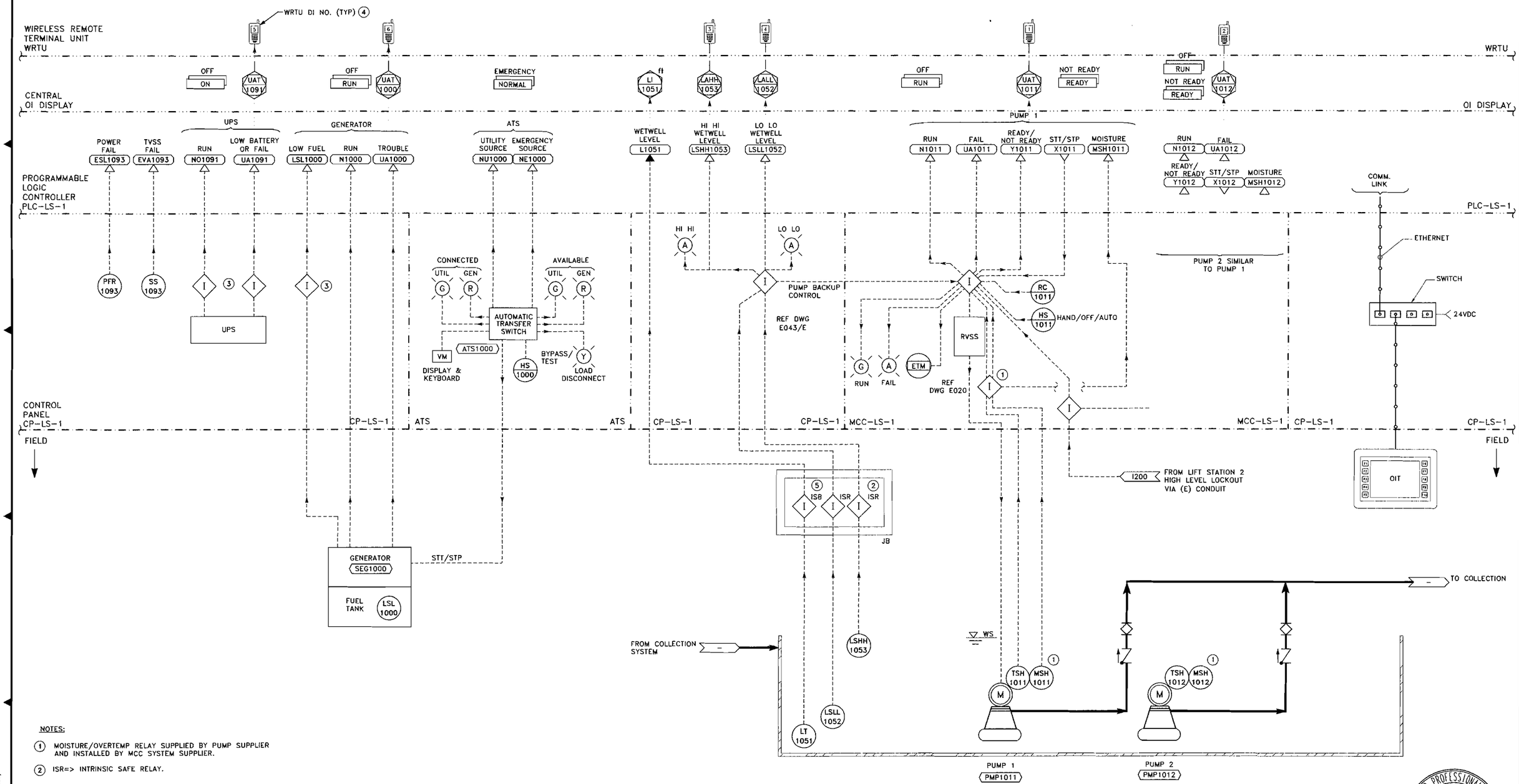

NOTES:

1. MOISTURE/OVERTEMP RELAY SUPPLIED BY PUMP SUPPLIER AND INSTALLED BY MCC SYSTEM SUPPLIER.
2. ISR=> INTRINSIC SAFE RELAY.
3. PROVIDE INTERFACE RELAYS AS NEEDED.
4. CONNECT TO WRTU DISCRETE INPUT CHANNEL NO. INDICATED. DRY (NON-POWERED) CONTACT INPUTS ONLY. PROVIDE INTERFACE RELAYS AS NEEDED.
5. INTRINSICALLY SAFE BARRIER FOR 4-20MA SIGNAL.

REGISTERED PROFESSIONAL ENGINEER WILLIAM P. CASSITY No. 17132 Exp. 9-30-11 ELECTRICAL STATE OF CALIFORNIA 10/19/09

CONFORMED

SCALE	BAR IS ONE INCH AT FULL SCALE	DATE	DESIGNED MR	ECO:LOGIC ENGINEERS · CONSULTANTS	CITY OF COLFAX SEWAGE LIFT STATION IMPROVEMENTS & SEWER REHABILITATION©	LIFT STATION 1 P&ID	DRAWING NUMBER	SHEET NUMBER
NONE	0 1" IF NOT ONE INCH ON THIS SHEET SCALE ACCORDINGLY	OCTOBER, 2009	DRAWN HAK	www.ecologic-eng.com			I100	76 OF 79
		FILE COLF09-006	CHECKED WPC					

FILE SPEC: P:\COLF09-006\ARTWORK\ELECTRICAL\COLF09-006 I100.dwg
PLOT DATE: Oct 19, 2009 - 11:02am

REVISION	DESCRIPTION	BY	APP	CITY	DATE

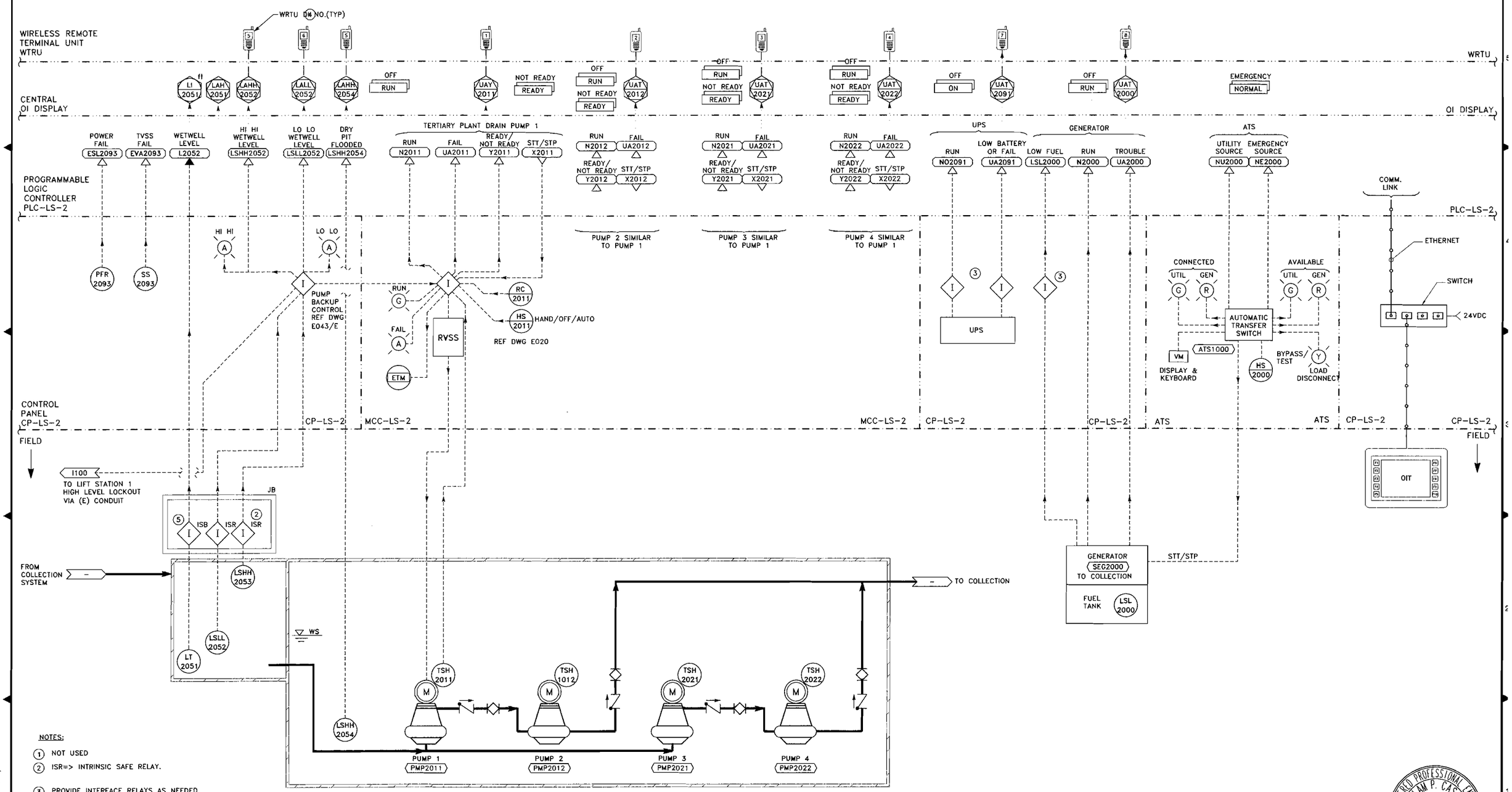

WET WELL/DRY-WELL

NOTES:

1. NOT USED
2. ISR=> INTRINSIC SAFE RELAY.
3. PROVIDE INTERFACE RELAYS AS NEEDED.
4. CONNECT TO WRTU DISCRETE INPUT CHANNEL NO. INDICATED. DRY (NON-POWERED) CONTACT INPUTS ONLY. PROVIDE INTERFACE RELAYS AS NEEDED.
5. INTRINSICALLY SAFE BARRIER FOR 4-20MA SIGNAL.

REGISTERED PROFESSIONAL ENGINEER WILLIAM P. CASSITY No.17132 Exp.9-30-11 ELECTRICAL STATE OF CALIFORNIA 10/19/09

CONFORMED

SCALE	BAR IS ONE INCH AT FULL SCALE	DATE	DESIGNED MR	ECO:LOGIC ENGINEERS · CONSULTANTS	CITY OF COLFAX SEWAGE LIFT STATION IMPROVEMENTS & SEWER REHABILITATION©	LIFT STATION 2 P&ID	DRAWING NUMBER	SHEET NUMBER
NONE	0 1" IF NOT ONE INCH ON THIS SHEET SCALE ACCORDINGLY	OCTOBER, 2009	DRAWN HAK	www.ecologic-eng.com			I200	77 OF 79
		FILE COLF09-006	CHECKED WPC					

FILE NAME: F:\COLF09-006\ARTY\ELECTRICAL\COLF09-006 I200.dwg
PLOT DATE: OCT 19, 2009 — 11:02am

REVISION	DESCRIPTION	BY	APP	CITY	DATE

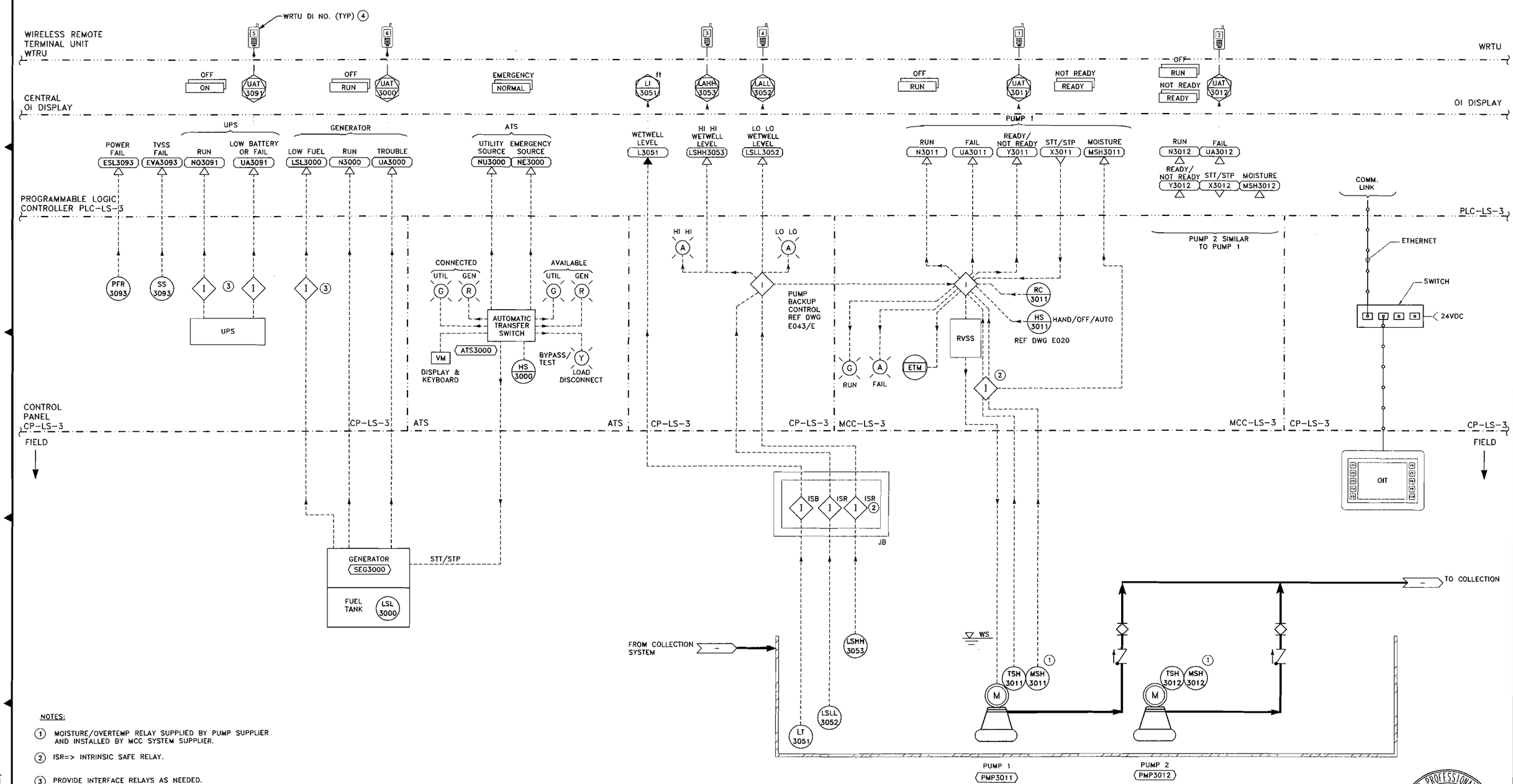

NOTES:

1. MOISTURE/OVERTEMP RELAY SUPPLIED BY PUMP SUPPLIER AND INSTALLED BY MCC SYSTEM SUPPLIER.
2. ISR=> INTRINSIC SAFE RELAY.
3. PROVIDE INTERFACE RELAYS AS NEEDED.
4. CONNECT TO WRTU DISCRETE INPUT CHANNEL NO. INDICATED. DRY (NON-POWERED) CONTACT INPUTS ONLY. PROVIDE INTERFACE RELAYS AS NEEDED.
5. INTRINSICALLY SAFE BARRIER FOR 4-20MA SIGNAL.

REGISTERED PROFESSIONAL ENGINEER WILLIAM P. CASSITY No.17132 Exp.9-30-11 ELECTRICAL STATE OF CALIFORNIA 10/19/09

CONFORMED

SCALE	BAR IS ONE INCH AT FULL SCALE	DATE	DESIGNED	ECO:LOGIC ENGINEERS · CONSULTANTS	CITY OF COLFAX SEWAGE LIFT STATION IMPROVEMENTS & SEWER REHABILITATION©	LIFT STATION 3 P&ID	DRAWING NUMBER	SHEET NUMBER
NONE	0 1" IF NOT ONE INCH ON THIS SHEET SCALE ACCORDINGLY	OCTOBER, 2009	MR	www.ecologic-eng.com			I300	78 OF 79
		FILE COLF09-006	DRAWN HAK					
			CHECKED WPC					

FILE DIR.: P:\COLF09-006\ACT\ELECTRICAL\COLF09-006 I300.dwg
PLOT DATE: Oct 19, 2009 - 11:02am

REVISION	DESCRIPTION	BY	APP	CITY	DATE

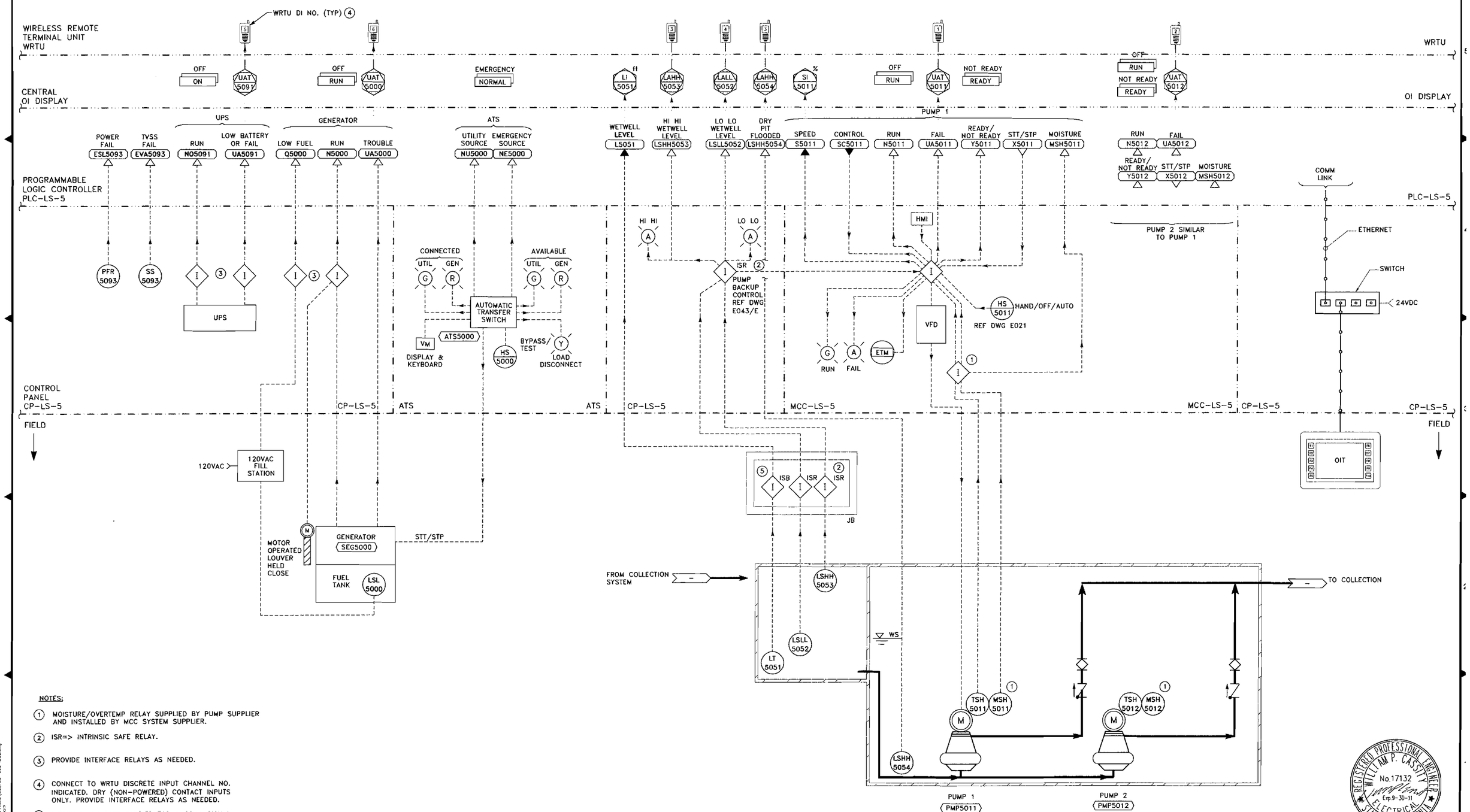

NOTES:

1. MOISTURE/OVERTEMP RELAY SUPPLIED BY PUMP SUPPLIER AND INSTALLED BY MCC SYSTEM SUPPLIER.
2. ISR=> INTRINSIC SAFE RELAY.
3. PROVIDE INTERFACE RELAYS AS NEEDED.
4. CONNECT TO WRTU DISCRETE INPUT CHANNEL NO. INDICATED. DRY (NON-POWERED) CONTACT INPUTS ONLY. PROVIDE INTERFACE RELAYS AS NEEDED.
5. INTRINSICALLY SAFE BARRIER FOR 4-20MA SIGNAL.

REGISTERED PROFESSIONAL ENGINEER WILLIAM P. CASSITY No.17132 Exp.9-30-11 ELECTRICAL STATE OF CALIFORNIA 10/19/09

CONFORMED

SCALE	BAR IS ONE INCH AT FULL SCALE 0 — 1" IF NOT ONE INCH ON THIS SHEET SCALE ACCORDINGLY	DATE OCTOBER, 2009	DESIGNED MR	ECO:LOGIC ENGINEERS · CONSULTANTS	CITY OF COLFAX SEWAGE LIFT STATION IMPROVEMENTS & SEWER REHABILITATION©	LIFT STATION 5 P&ID	DRAWING NUMBER	SHEET NUMBER
NONE		FILE COLF09-006	DRAWN HAK	www.ecologic-eng.com			1500	79 OF 79
			CHECKED WPC					

FILE SPEC: P:\COLF09-006\ARTY\ELECTRICAL\COLF09-006 1500.dwg
PLOT DATE: Oct 19, 2009 - 11:03am

DESIGN DRAWINGS FOR CITY OF COLFAX WASTEWATER TREATMENT PLANT UPGRADE PROJECT

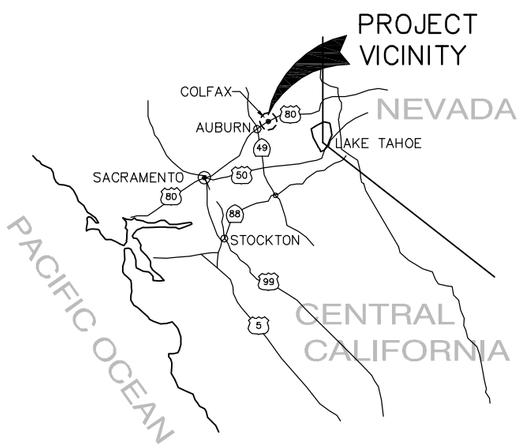

LOCATION MAP
NTS

N

CITY OF COLFAX

APPROVED BY

Craig Olson, Project Manager
HDR Engineering Inc.

Date

Joan Phillipe, City Manager
City of COLFAX

Date

REGISTERED PROFESSIONAL ENGINEER
CRAIG A. OLSON
NO. 39819
EXP. 12-31-07
CIVIL
STATE OF CALIFORNIA

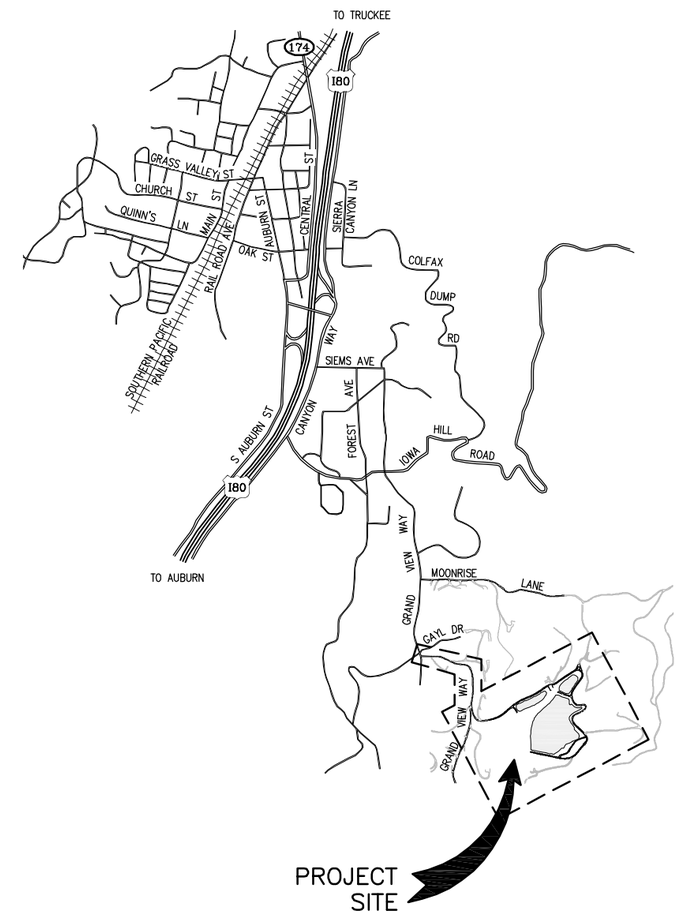

VICINITY MAP
NTS

N

JULY 27, 2007

CORRECTED PER CONSTRUCTION RECORDS

HDR

HDR Engineering Inc.
Folsom, CA

C:/pwworking/sac/dms17101/30333-06-01.dwg
10-12-10 PWNNED 13:21:38

GENERAL NOTES:

1. THE TYPES, LOCATIONS, SIZES AND DEPTHS OF EXISTING UNDERGROUND FACILITIES AS SHOWN ON THESE IMPROVEMENT PLANS WERE OBTAINED FROM SOURCES OF VARYING RELIABILITY. A REASONABLE EFFORT HAS BEEN MADE TO LOCATE AND DELINEATE ALL KNOWN UNDERGROUND FACILITIES. HOWEVER, THE OWNER AND ENGINEER CAN ASSUME NO RESPONSIBILITY FOR THE COMPLETENESS OR ACCURACY OF THE DELINEATION OF SUCH UNDERGROUND FACILITIES, NOR FOR THE EXISTENCE OF OTHER BURIED OBJECTS OR FACILITIES WHICH MAY BE ENCOUNTERED BUT WHICH ARE NOT SHOWN ON THESE DRAWINGS. THE CONTRACTOR SHALL BE RESPONSIBLE FOR DETERMINING THE EXACT LOCATION OF THOSE FACILITIES SHOWN AND ANY WHICH MAY EXIST AND ARE NOT SHOWN PRIOR TO COMMENCEMENT OF ANY WORK. THE CONTRACTOR SHALL EXPOSE ALL UNDERGROUND FACILITIES THAT ARE TO BE CONNECTED TO OR THAT ARE IN THE PATH OF THE PROPOSED IMPROVEMENTS FOR VERIFICATION OF LOCATION AND ELEVATION. THE CONTRACTOR SHALL DETERMINE LOCATION OF CONFLICTS, IF ANY, PRIOR TO COMMENCING CONSTRUCTION OF THAT PORTION OF THE WORK THAT WOULD BE AFFECTED BY A CONFLICT WITH THE EXISTING FACILITIES. MINOR CHANGES, (< 5 FT HORIZ, < 1 FT VERT), IN THE ACTUAL LOCATION, DEPTH AND CONFIGURATION OF EXISTING PIPING SYSTEMS DOES NOT CONSTITUTE A CHANGED SITE CONDITION AND THEREFORE NO EXTRA PAYMENT WILL BE ALLOWED.
2. LOCATION SHOWN FOR ALL NEW SITE PIPING AND ODOR CONTROL DUCTING IS APPROXIMATE AND DEPENDS ON LOCATION OF EXISTING PIPING AND OTHER IMPROVEMENTS. THE CONTRACTOR IS REQUIRED TO FOLLOW THE ALIGNMENT SHOWN AS CLOSELY AS POSSIBLE AFTER DETERMINING EXACT LOCATION OF EXISTING FACILITIES.
3. COORDINATE ALL SITE PIPING WITH SITE ELECTRICAL WORK, (SEE DRAWING 0E-09 AND 0E-10). DO NOT START YARD PIPING UNTIL YARD ELECTRICAL CONDUITS ARE LOCATED.
4. SMALL DIAMETER (< 4") WATER, EXISTING AND OTHER MISCELLANEOUS PIPING EXISTS THROUGHOUT THE PLANT AREA. THE CONTRACTOR IS REQUIRED TO REPAIR PIPING DAMAGED BY CONSTRUCTION AND/OR REALIGN PIPING AS REQUIRED TO CONSTRUCT THE IMPROVEMENTS UNDER THIS CONTRACT. NO ADDITIONAL COMPENSATION WILL BE GRANTED TO THE CONTRACTOR FOR THE REPAIR OF THIS SMALL DIAMETER PIPING.
5. ALL PAVING, LANDSCAPING, PIPING AND OTHER EXISTING FACILITIES NOT DESIGNATED FOR REMOVAL/DEMOLITION DURING CONSTRUCTION OF NEW FACILITIES, TO BE PROTECTED IN PLACE OR REPLACED IN KIND AT COMPLETION OF CONSTRUCTION.
6. ALL PAVING TO BE REMOVED SHALL BE SAWCUT PRIOR TO REMOVAL. MATCH EXISTING PAVEMENT ELEVATIONS AT SAWCUT LINES. SLOPE PAVEMENT TO DRAIN IN DIRECTION SHOWN (↑). MINIMUM SLOPE = 0.5%.
7. EXISTING SPOT ELEVATION INFORMATION SHOWN ON THESE PLANS WAS DETERMINED USING PHOTOGRAMMETRIC METHODS. IT IS ACCURATE TO WITHIN ±0.3 FEET OF ELEVATIONS SHOWN.
8. THREE BENCHMARKS FOR THIS PROJECT EXIST AND ARE INDICATED ON THE PLANS AND MARKED △ ON THIS DRAWING. CONTRACTOR TO VERIFY CONTROL PRIOR TO BEGINNING WORK.
9. HORIZONTAL SURVEY CONTROL POINTS ESTABLISHING BASE LINE FOR THIS PROJECT ARE IDENTIFIED ON THIS SHEET AS ◇. CONTRACTOR TO VERIFY CONTROL PRIOR TO BEGINNING WORK.
10. THIS WASTEWATER TREATMENT PLANT IS A CONTINUOUSLY OPERATING FACILITY AND MUST REMAIN IN OPERATION DURING CONSTRUCTION. SEE SPECIFICATIONS SECTION 01650 FOR PROJECT CONSTRUCTION SEQUENCE AND FACILITY START-UP.
11. MAINTAIN 3'-0" MINIMUM COVER ON ALL PIPING UNLESS SPECIFICALLY SHOWN OTHERWISE.

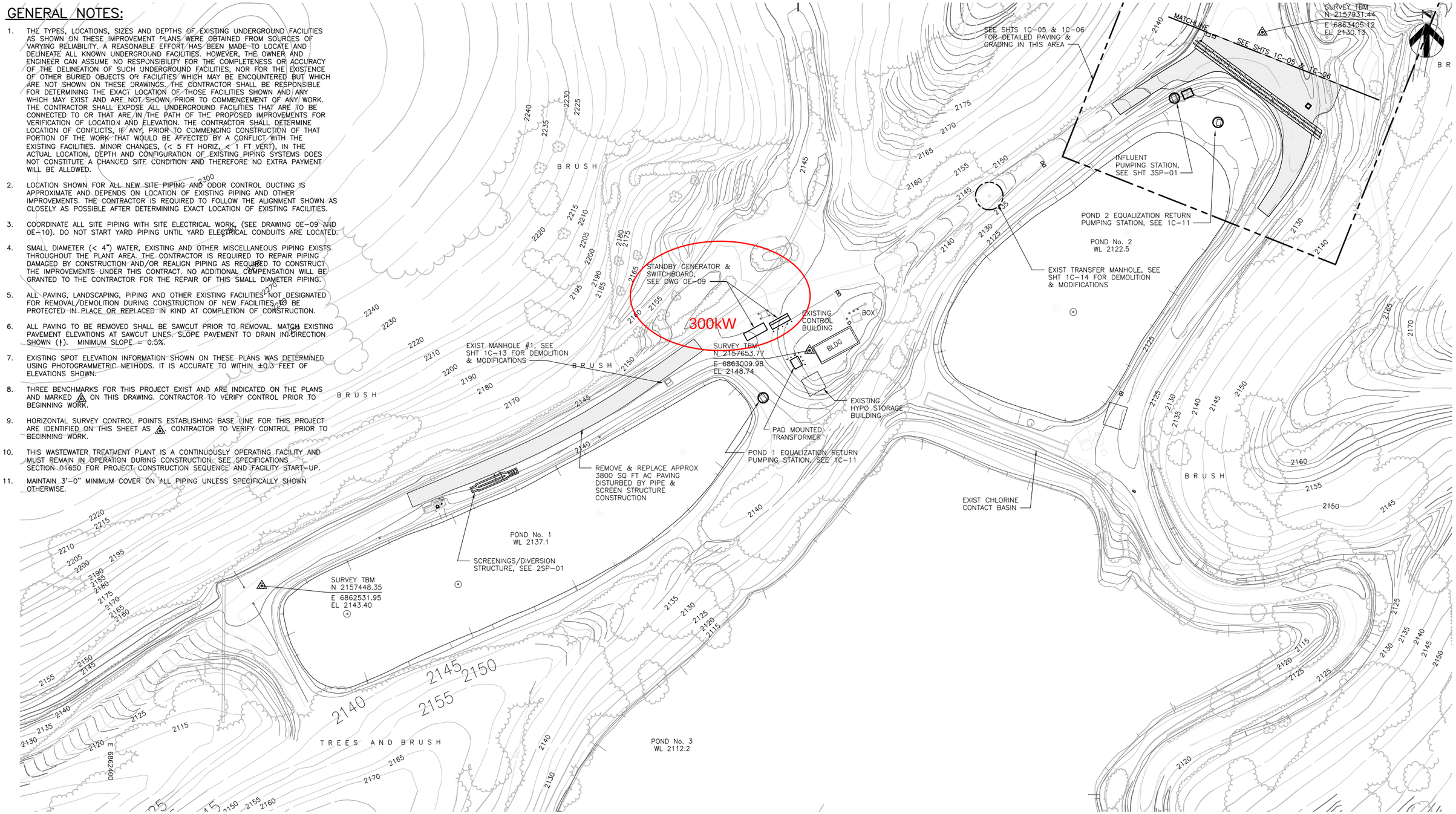

C:\PWworking\SAC\dms17102\30333-1C-02.dwg, Layout1, 1/26/2010 11:32:33 AM

FILE: C:\PWworking\SAC\dms17102\30333-1C-02.dwg
DATE: 01/26/10 11:32:23am, pvanmeu

HDR
HDR Engineering, Inc.

ISSUE	DATE	DESCRIPTION
0	7/27/07	CONFORMED FOR CONSTRUCTION
		(INCLUDES ADDENDA No. 1)
A	3/21/07	ISSUED FOR BIDS

PROJECT MANAGER	CRAIG A. OLSON
DESIGNED	C. OLSON
DESIGNED	J. LENG
CHECKED	J. REIL
DRAWN	P. VAN MEURS
DATE	MARCH 2007
PROJECT NUMBER	202087-30333

CITY OF COLFAX

WASTEWATER TREATMENT PLANT
UPGRADE PROJECT

OVERALL SITE PAVING AND GRADING PLAN

0 1" 2"

FILENAME	30333-1C-02.dwg
SCALE	1" = 40'

SHEET
1C-02

NOTES:

1. PIPING BEYOND MATCHLINE IS DEPENDENT UPON BIOLOGICAL TREATMENT UNIT MANUFACTURER SELECTED BY CONTRACTOR. CONTRACTOR TO PROVIDE PROPOSED PIPING LAYOUT DRAWINGS FOR ENGINEER REVIEW, COMMENT AND APPROVAL PRIOR TO BEGINNING CONSTRUCTION OF IMPROVEMENTS.
2. PROVIDE CONCRETE ENCASEMENT ABOUT POTABLE WATER PIPELINE WHERE 10-FOOT OF SEPARATION FROM SANITARY SEWER, SECONDARY EFFLUENT, AND PLANT DRAIN LINES IS NOT POSSIBLE.
3. CONTRACTOR TO DEWATER POND NO. 1 AND POND NO. 2 AFTER COMPLETION OF NEW TREATMENT PLANT (INCLUDING SUCCESSFUL COMPLETION OF DEMONSTRATION PERIOD). EXISTING SLUDGE TO BE REMOVED AND PROPERLY DISPOSED OF OFF-SITE BY CONTRACTOR AFTER 1-MONTH OF DRYING TIME BETWEEN MAY 1, AND OCTOBER 1. CONTRACTOR TO BASE BID ON 2-FOOT OF SLUDGE IN EACH POND AFTER DRYING PERIOD. EXISTING LIQUID IN PONDS MAY BE PUMPED (BY CONTRACTOR) TO THE NEW TREATMENT PLANT PROCESS PROVIDED TOTAL FLOW DOES NOT EXCEED 0.5 MGD. THE CONTRACTOR IS REQUIRED TO PRESSURE WASH AND CLEAN BOTTOM OF PONDS PRIOR TO INSTALLATION OF CRACK SEALANT.
4. TEMPORARILY CONSTRUCT NEW DITCH WEST OF NEW WASTEWATER TREATMENT PLANT. INSTALL ENCASED CMP'S AS SOON AS PRACTICAL.

ENCASED CMP DETAIL (1 / –)
1/2" = 1'-0"

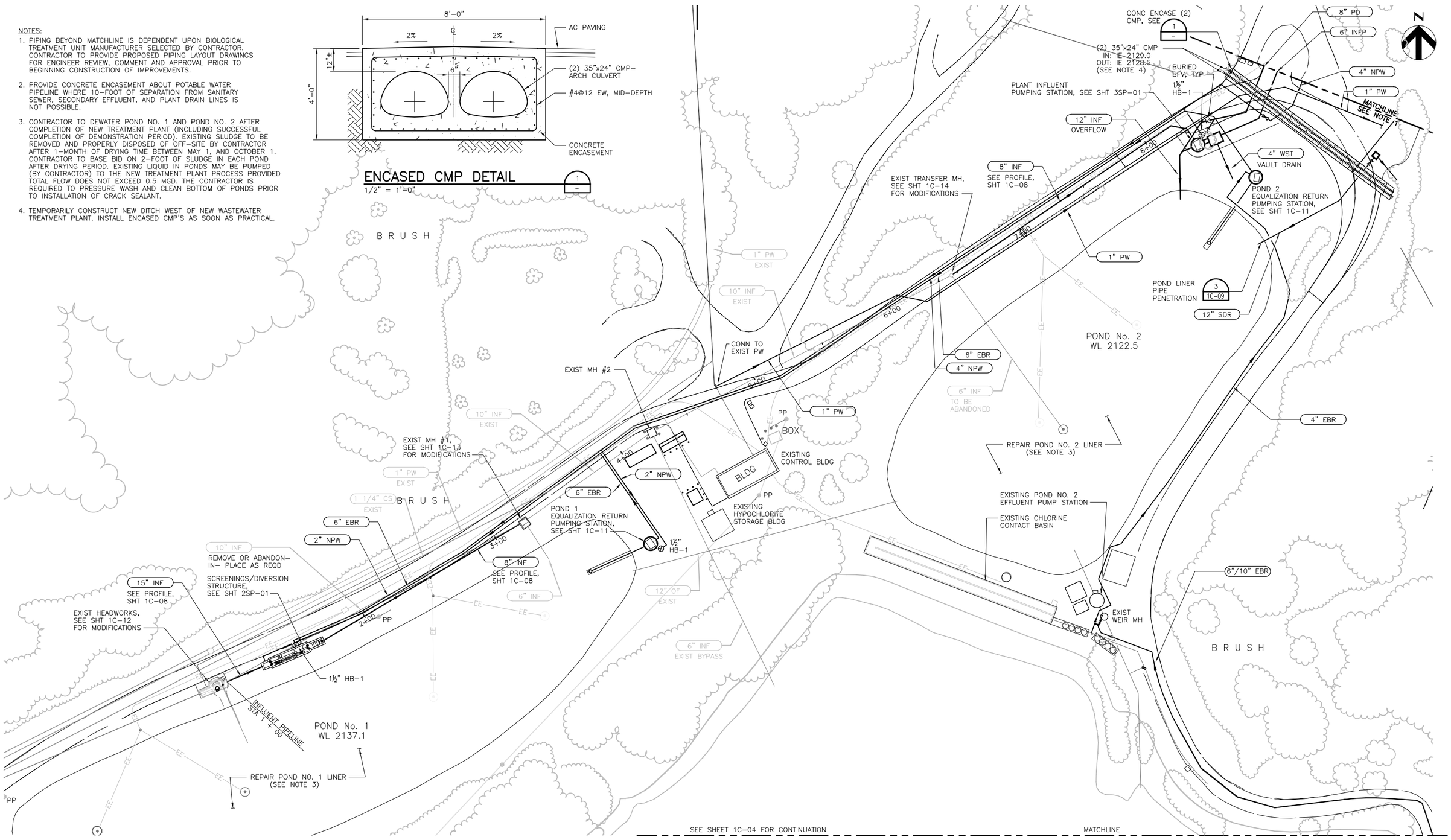

FILE: C:\PWworking\SAC\dms17102\30333-1C-03.dwg, Layout1, 1/26/2010 1:17:07 PM
DATE: 01/26/10 01:17:07pm, pvanmeu

HDR
HDR Engineering, Inc.

ISSUE	DATE	DESCRIPTION
1	1/27/10	CORRECTED PER CONSTRUCTION RECORDS
0	7/27/07	CONFORMED FOR CONSTRUCTION
		(INCLUDES ADDENDA No. 1)
A	3/21/07	ISSUED FOR BIDS

PROJECT MANAGER	CRAIG A. OLSON
DESIGNED	C. OLSON
DESIGNED	J. LENG
CHECKED	J. REIL
DRAWN	P. VAN MEURS
DATE	**MARCH 2007**
PROJECT NUMBER	202087-30333

CITY OF COLFAX
WASTEWATER TREATMENT PLANT UPGRADE PROJECT

SITE YARD PIPING PLAN I

0 1" 2"

FILENAME	30333-1C-03.dwg
SCALE	1" = 30'

SHEET **1C-03**

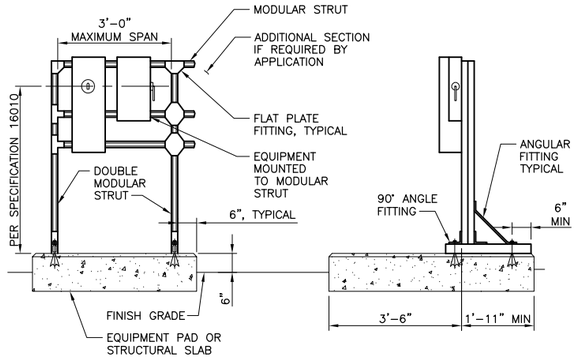

FRONT VIEW SIDE VIEW

NOTES:

1. COMBINED EQUIPMENT LOADS PER 36" SPAN SHALL NOT EXCEED 500 LBS.
2. PROVIDE GROUNDING FOR OUTDOOR INSTALLATIONS.
3. HOT DIPPED GALVANIZED AFTER FABRICATION.
4. ANCHORS: STAINLESS STEEL, 1/2" DIAMETER, 3 1/2" EMBEDMENT.
5. PROTECT SURFACES WITH DISSIMILAR MATERTIALS IN ACCORDANCE WITH SPECIFICATION 09905.

MODULAR EQUIPMENT RACK

1 / – 16010-02

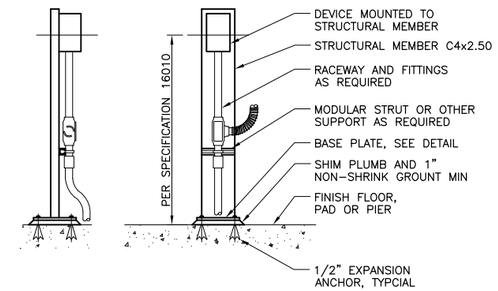

SIDE VIEW FRONT VIEW

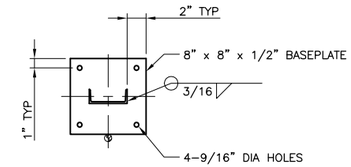

BASE PLATE PLAN VIEW

NOTES:

1. EQUIPMENT LOAD SHALL NOT EXCEED 50 LBS.
2. PEDESTAL ASSEMBLY MATERIAL TYPE: ALUMINUM.
3. ANCHORS: STAINLESS STEEL, 1/2" DIAMETER, 3 1/2" EMBEDMENT.
4. ATTACH MODULAR STRUT TO STRUCTURAL MEMBER WITH A MINIMUM OF TWO 3/8" DIAMTER STAINLESS STEEL ROUND HEAD MACHINE SCREWS WITH LOCK WASHER AND NUT.
5. PROTECT SURFACES WITH DISSIMILAR MATERIALS IN ACCORDANCE WITH SPECIFICATION 09905.

SINGLE DEVICE PEDESTAL

2 / – 16010-04

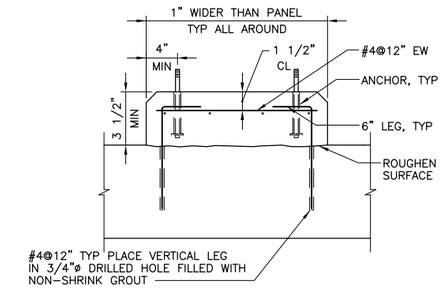

NOTES:

1. PROVIDE ABOVE PAD UNDER EQUIPMENT SUPPORTED ON STRUCTURAL OR ELEVATED SLABS. ALSO PROVIDE FOR ELECTRICAL & MECHANICAL EQUIPMENT WEIGHING LESS THAN 5000 LBS.

ELECTRICAL PAD

3 / – 16010-10

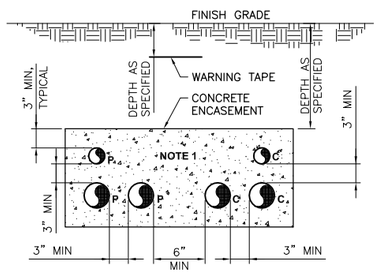

NOTES:

1. NUMBER OF CONDUITS AS REQUIRED FOR THE APPLICATION.
2. P SUBSCRIPT ELECTRICAL POWER OR CONTROL CONDUIT.
3. C SUBSCRIPT COMMUNICATION (TELEPHONE, DATA, INSTRUMENTATION) CONDUIT.

CONCRETE ENCASED DUCT BANK SECTION

4 / – 16135-02

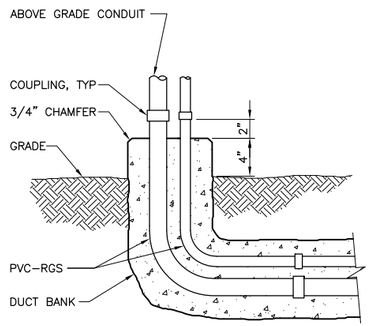

NOTE:

1. SEE DUCT BANK SECTION DETAIL FOR ADDITIONAL REQUIREMENTS.

CONDUIT TRANSITION TO ABOVE GRADE (EXTERIOR)

5 / – 16135-04

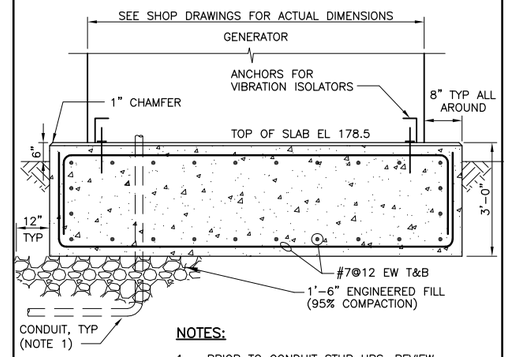

NOTES:

1. PRIOR TO CONDUIT STUB UPS, REVIEW GENERATOR SUBMITTAL FOR ACTUAL LOCATIONS OF ALL ELECTRICAL, CONNECTIONS.

GENERATOR PAD

NTS

6 / –

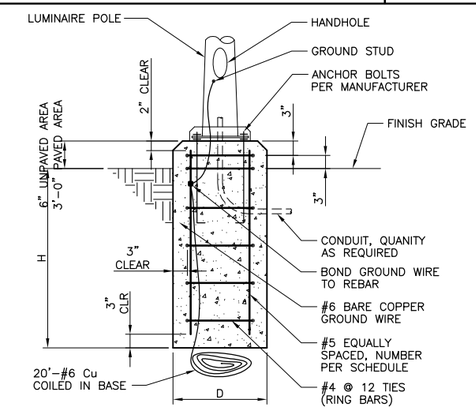

DIMENSION SCHEDULE			
POLE HEIGHT	MINIMUM D	MINIMUM H	VERTICAL REBAR EACH
UP TO 10'	2'-0"	4'-6"	6
11' TO 20'	2'-0"	6'-6"	6

LIGHT POLE FOUNDATION

7 / – 16500-01

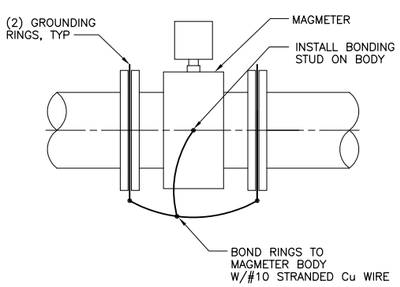

MAGNETIC FLOW METER INSTALLATION

NTS

8 / –

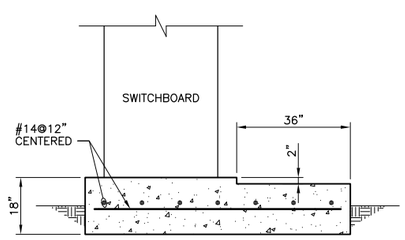

OUTDOOR SWITCHBOARD PAD

1/2"=1'-0"

9 / –

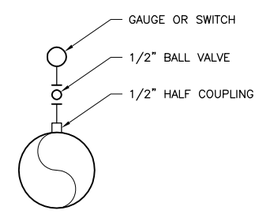

PRESSURE SWITCH OR PRESSURE GUAGE

NTS

10 / –

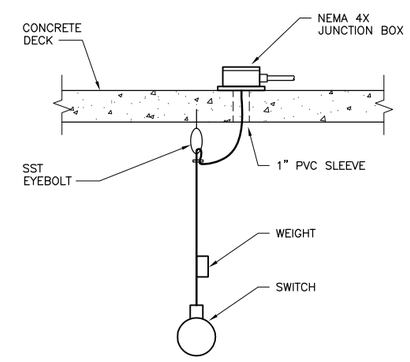

LEVEL SWITCH

NTS

11 / –

HDR
HDR Engineering, Inc.

ISSUE	DATE	DESCRIPTION
1	1/27/10	CORRECTED PER CONSTRUCTION RECORDS
0	7/27/07	CONFORMED FOR CONSTRUCTION
		(INCLUDES ADDENDA No. 1)
A	3/21/07	ISSUED FOR BIDS

PROJECT MANAGER	CRAIG A. OLSON
DESIGNED	W. ETTLICH
DESIGNED	A. LAROUERE
CHECKED	L. SMITHEY
DRAWN	P. VAN MEURS
DATE	MARCH 2007
PROJECT NUMBER	202087-30333

CITY OF COLFAX
WASTEWATER TREATMENT PLANT UPGRADE PROJECT

ELECTRICAL DETAILS I

0 1" 2"

FILENAME	30333-0E-02.dwg
SCALE	AS NOTED

SHEET **0E-02**

FILE: C:\pwworking\sac\dms17107\30333-0E-02.dwg, Layout1, 1/29/2010 4:33:59 PM
DATE: 01/29/10 dessacdpen, pvanmeu

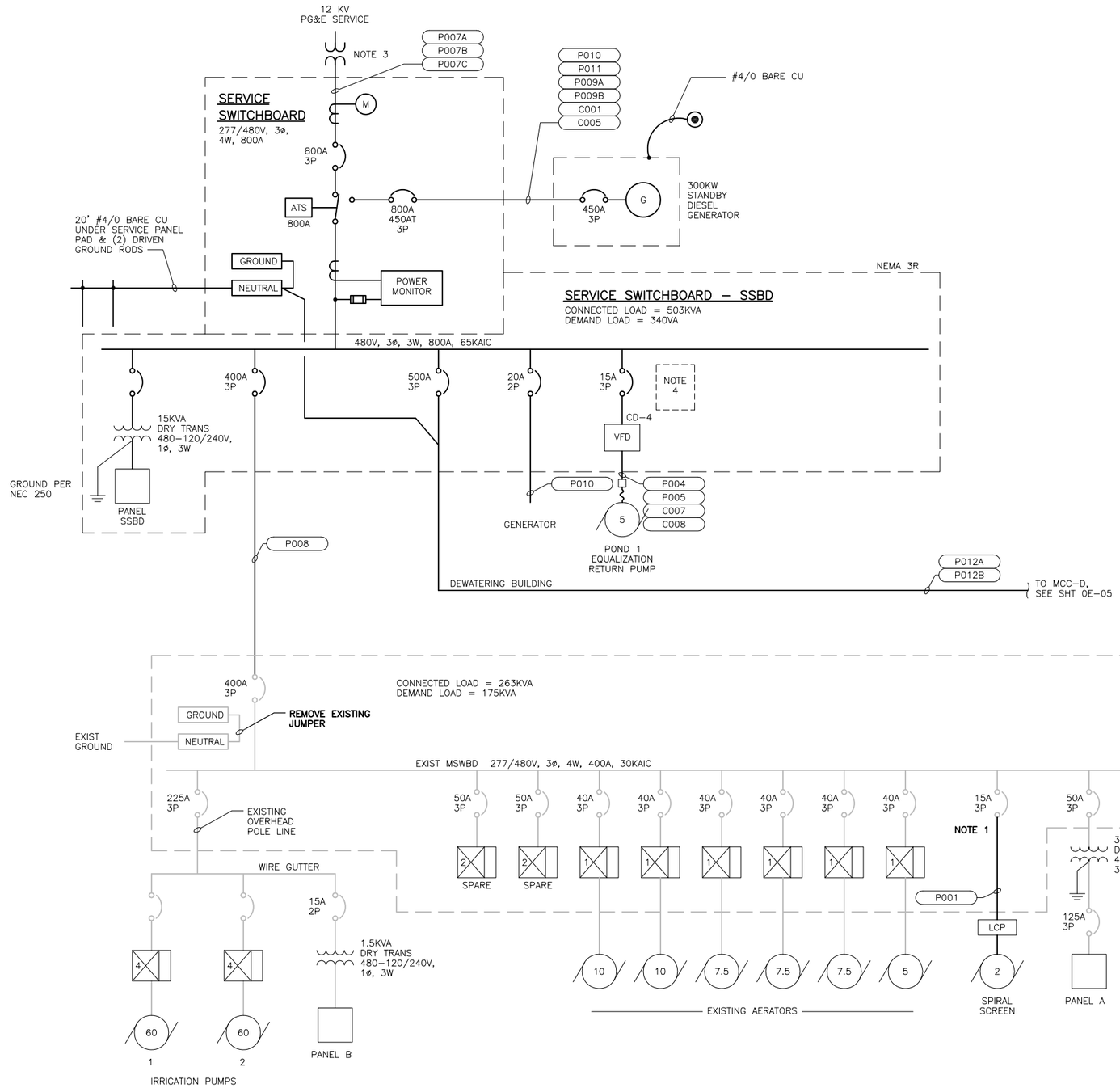

EXIST IRRIGATION PUMP STATION

NOTES:

1. REUSE EXISTING COMMINUTOR STARTER BUCKET. CONVERT TO FEEDER BREAKER BY REMOVING STARTER, ASSOCIATED WIRING AND ASSOCIATED APPURTENANCES. PLUG ALL UNUSED HOLES IN COVER OF STARTER.
2. LIGHT LINES INDICATE EXISTING.
3. INSTALL 2–5" PRIMARY CONDUITS, 3–4" SECONDARY CONDUITS AND TRANSFORMER PAD ALL IN ACCORDANCE WITH PG&E STANDARDS.
4. ONE SPACE UNIT WITH BLANK DOOR FOR RETURN PUMP PROTECTION UNIT (MINICAS). MOUNT AND WIRE PER CD-4 AND INSTALL NAMEPLATE ON COVER.

HDR
HDR Engineering, Inc.

ISSUE	DATE	DESCRIPTION
1	1/27/10	CORRECTED PER CONSTRUCTION RECORDS
0	7/27/07	CONFORMED FOR CONSTRUCTION
		(INCLUDES ADDENDA No. 1)
A	3/21/07	ISSUED FOR BIDS

PROJECT MANAGER	CRAIG A. OLSON
DESIGNED	W. ETTLICH
DESIGNED	A. LAROUERE
CHECKED	L. SMITHEY
DRAWN	P. VAN MEURS
DATE	MARCH 2007
PROJECT NUMBER	202087–30333

CITY OF COLFAX
WASTEWATER TREATMENT PLANT
UPGRADE PROJECT

ELECTRICAL SINGLE LINE I

0 1" 2"

FILENAME	30333–0E–04.dwg
SCALE	NONE
SHEET	0E-04

C:\pwworking\sac\dms17107\30333-0E-04.dwg, Layout1, 1/29/2010 4:31:11 PM
FILE: C:\pwworking\sac\dms17107\30333-0E-04.dwg
DATE: 01/29/10 04:31:11pm, pvanmeu

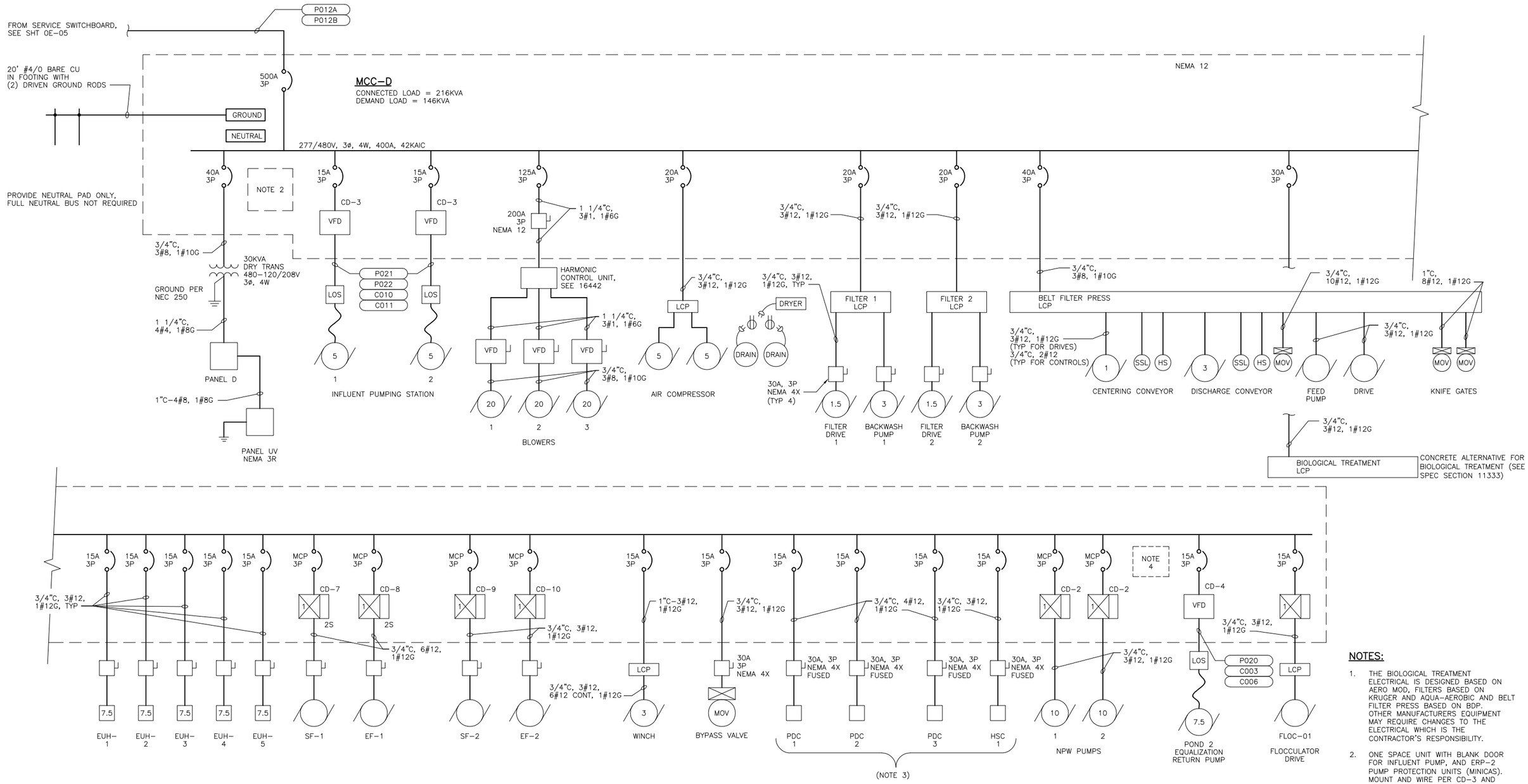

NOTES:

1. THE BIOLOGICAL TREATMENT ELECTRICAL IS DESIGNED BASED ON AERO MOD, FILTERS BASED ON KRUGER AND AQUA-AEROBIC AND BELT FILTER PRESS BASED ON BDP. OTHER MANUFACTURERS EQUIPMENT MAY REQUIRE CHANGES TO THE ELECTRICAL WHICH IS THE CONTRACTOR'S RESPONSIBILITY.
2. ONE SPACE UNIT WITH BLANK DOOR FOR INFLUENT PUMP, AND ERP-2 PUMP PROTECTION UNITS (MINICAS). MOUNT AND WIRE PER CD-3 AND CD-4, AND INSTALL NAMEPLATE ON COVER.
3. PDC 1, 2, AND 3 REQUIRE NEUTRAL WIRE.
4. MOUNT PUMP CONTROL IN SPACE UNIT, SEE CD-2. INSTALL NAME-PLATE ON COVER.

C:\PWworking\SAC\dms17107\30333-0E-05.dwg, Layout1, 1/29/2010 11:33:45 AM

FILE: C:\PWworking\SAC\dms17107\30333-0E-05.dwg
DATE: 01/29/10 11:33:47am, pamreu

HDR
HDR Engineering, Inc.

ISSUE	DATE	DESCRIPTION
1	1/27/10	CORRECTED PER CONSTRUCTION RECORDS
0	7/27/07	CONFORMED FOR CONSTRUCTION
		(INCLUDES ADDENDA No. 1)
A	3/21/07	ISSUED FOR BIDS

PROJECT MANAGER	CRAIG A. OLSON
DESIGNED	W. ETTLICH
DESIGNED	A. LAROUERE
CHECKED	L. SMITHEY
DRAWN	P. VAN MEURS
DATE	MARCH 2007
PROJECT NUMBER	202087-30333

CITY OF COLFAX
WASTEWATER TREATMENT PLANT UPGRADE PROJECT

ELECTRICAL SINGLE LINE II

0 1" 2"

FILENAME	30333-0E-05.dwg
SCALE	NONE

SHEET 0E-05

PANEL: D	FEEDER ENTRANCE: BOTTOM	MOUNTING: SURFACE
SERVICE: 120/208V, 3P, 4W		SERVICE ENTRANCE LABEL: NO
MAIN DEVICE: 100A CIRCUIT BREAKER		

CKT NO.	CIRCUIT IDENTIFICATION	CB AMPS	VA PER PHASE A	VA PER PHASE B	VA PER PHASE C	CB AMPS	CIRCUIT IDENTIFICATION	CKT NO.
1	LIGHTS	20/1	500					2
3	LIGHTS	20/1		1100		20/1	OUTLETS	4
5	LIGHTS	20/1			1500	20/1	OUTLETS	6
7	LIGHTS	20/1	900			20/1	OUTLETS	8
9	FILTER LIGHTS	20/1		200		20/1	OUTLETS, AIR SYSTEM	10
11	FILTER OUTLET	20/1			500	20/1	OUTLET–TURBIDIMETER	12
13	BIOLOGICAL LIGHTS	20/1	300			20/1	FIT–001, FIT–002	14
15	BIOLOGICAL OUTLETS	20/1		500		20/1	AUTODIALER	16
17	NPW PUMP CONTROL	20/1			100	20/1	RECORDER	18
19	OUTSIDE LIGHT	20/1	200			20/1	INFLUENT FLOW METER	20
21	HP–1A	30/2		2500		20/1	BIOLOGICAL TREATMENT PANEL	22
23					2500	20/1	BIOLOGICAL TREATMENT PANEL	24
25	HP–1B	20/2	800			20/1	EF–5	26
27				800		20/1	EF–3, VCP–1	28
29	HP–2A	20/2			1000	50/3	PANEL UV	30
31			1000					32
33	HP–2B	20/2		600				34
35					600		SPACE	36
37	WATER HEATER	30/2	2000				"	38
39				2000			"	40
41	BATH WALL HEATER				1500		"	42
	EST TOTAL VA PER PHASE		7600	10300	10000			
	EST TOTAL PANELBOARD VA				27900			

PANEL: SSBD	FEEDER ENTRANCE: BOTTOM	MOUNTING: SERVICE SWBD
SERVICE: 120/240V, 1ø, 3W		SERVICE ENTRANCE LABEL: NO
MAIN DEVICE: 100A LUGS		

CKT NO.	CIRCUIT IDENTIFICATION	CB AMPS	VA PER PHASE A	VA PER PHASE B	CB AMPS	CIRCUIT IDENTIFICATION	CKT NO.
1	GEN BATT CHARGER	20/1	200		20/1	POWER MONITOR	2
3	AREA LIGHT	20/1		200	20/1	ERPS–1 LIGHT	4
5	SWITCHBOARD LIGHT	20/1	200		20/1	ERPS–1 OUTLET	6
7	SWITCHBOARD OUTLET	20/1		500		SPACE	8
9	GENERATOR BATTERY CHARGER	20/1	200			"	10
11	SPACE					"	12
13	"					"	14
15	"						16
17	"						18
	EST TOTAL VA PER PHASE		1300	900			
	EST TOTAL PANELBOARD VA			2200			

PANEL: UV	FEEDER ENTRANCE: BOTTOM	MOUNTING: PEDESTAL, NEMA3R
SERVICE: 120/208V, 3ø, 4W		SERVICE ENTRANCE LABEL: NO
MAIN DEVICE: 60A CIRCUIT BREAKER		

CKT NO.	CIRCUIT IDENTIFICATION	CB AMPS	VA PER PHASE A	VA PER PHASE B	CB AMPS	CIRCUIT IDENTIFICATION	CKT NO.
1	LGHTS	20/1	200		20/1	OUTLET	2
3	UVT	20/1		100	20/1	INF PUMP STATION LIGHTS	4
5	SCC	20/1	300		20/1	INF PUMP STATION OUTLET	6
7	SPACE					SPACE	8
9	"					"	10
11	"					"	12
13	"					"	14
15	"					"	16
17	"					"	18
	EST TOTAL VA PER PHASE		1500	300			
	EST TOTAL PANELBOARD VA			1800			

LIGHTING FIXTURE SCHEDULE

TYPE	DESCRIPTION	MANUFACTURER'S PRODUCT NUMBER	LAMPS	NOTES
A	CEILING MTD. LOW PROFILE WRAP AROUND, 48"x10" FIXTURE, 2 LAMP, 120V WITH ACRYLIC PRISMATIC DIFFUSER	LITHONIA 2LB232–120GEB	2 LAMP, T8 FLUORESCENT	
B	CEILING MTD. INDUSTRIAL FLUORESCENT FIXTURE, 2–32W LAMP, 120V ENCLOSED AND GASKETED RATED FOR DAMP LOCATION	LITHONIA DM–232–AR–GEB	2 LAMP, T8 FLUORESCENT	
C	TURRET INUSTRIAL 4' LENGTH FIXTURE, 2 LAMP, 120V WITH 10% UPLIGHT	LITHONIA AF10–232–120GEB	2 LAMP, T8 FLUORESCENT	CEILING MOUNTED
D	SITE LIGHT PER DETAIL 16500–01	LITHONIA, KSE1	150W HPS	20' POLE MOUNT, LITHONIA SSS 205C. PROVIDE PHOTOCELL WHERE SHOWN
E	OUTDOOR HPS, POLE MOUNTED, 120V	LITHONIA, KSE1	1–100 HPS	MOUNT ON 10'–0" POLE, SEE POLE BASE DETAIL ON 0E–03
F	WALL MOUNTED EMERGENCY FIXTURE WITH 2 LAMPS HALOGEN, 2–12W LAMPS, 120V, SEALED MAINTENANCE–FREE 12V LEAD CALCIUM BATTERY AND BUILT IN CIRCUITRY PROTECTION	LITHONIA MCPHILBEN CTXR12L54WVSWM	2–12W HALOGEN LAMPS	MOUNT FIXTURE AT 8'–0" AFF
G	WALL MOUNT FIXTURE WITH CORROSION RESISTANT DIE CAST ALUM HOUSING WITH BRONZE THERMOSET POLYESTER POWDER FINISH AND SEALED AND GASKETED REFRACTOR, 100W HPS, 120V LISTED FOR WET LOCATIONS	LITHONIA WALL PAKS TWP–100S–120CR–LP1	1–100W, HPS LAMP	WALL MOUNT 9'–0" AFF
H	EXIT LIGHT WITH MATTE BLACK HOUSING AND BRUSHED ALUMINUM FACE WITH PROTECTIVE COATING, BACK MOUNTED WITH EMERGENCY LED SINGLE FACE, DIRECTIONAL ARROW KNOCKOUT, GREEN PANEL AND 120V WITH NICAD BATTERY	MCPHILBEN ER30VL–1G	LED LAMP	WITH BATTERY BACK–UP AND UNIVERSAL MOUNTING

HDR Engineering, Inc.

ISSUE	DATE	DESCRIPTION
1	1/27/10	CORRECTED PER CONSTRUCTION RECORDS
0	7/27/07	CONFORMED FOR CONSTRUCTION
		(INCLUDES ADDENDA No. 1)
A	3/21/07	ISSUED FOR BIDS

PROJECT MANAGER	CRAIG A. OLSON
DESIGNED	W. ETTLICH
DESIGNED	A. LAROUERE
CHECKED	L. SMITHEY
DRAWN	N. RIZZATO
DATE	MARCH 2007
PROJECT NUMBER	202087–30333

CITY OF COLFAX

WASTEWATER TREATMENT PLANT UPGRADE PROJECT

PANEL SCHEDULES

0 1" 2"

FILENAME	30333–0E–06.dwg
SCALE	NONE

SHEET **0E-06**

C:\PWworking\SAC\dms17107\30333-0E-06.dwg, Layout1, 1/29/2010 12:06:54 PM
FILE: C:\PWworking\SAC\dms17107\30333-0E-06.dwg
DATE: 01/29/10 12:06:55pm, pwarneu

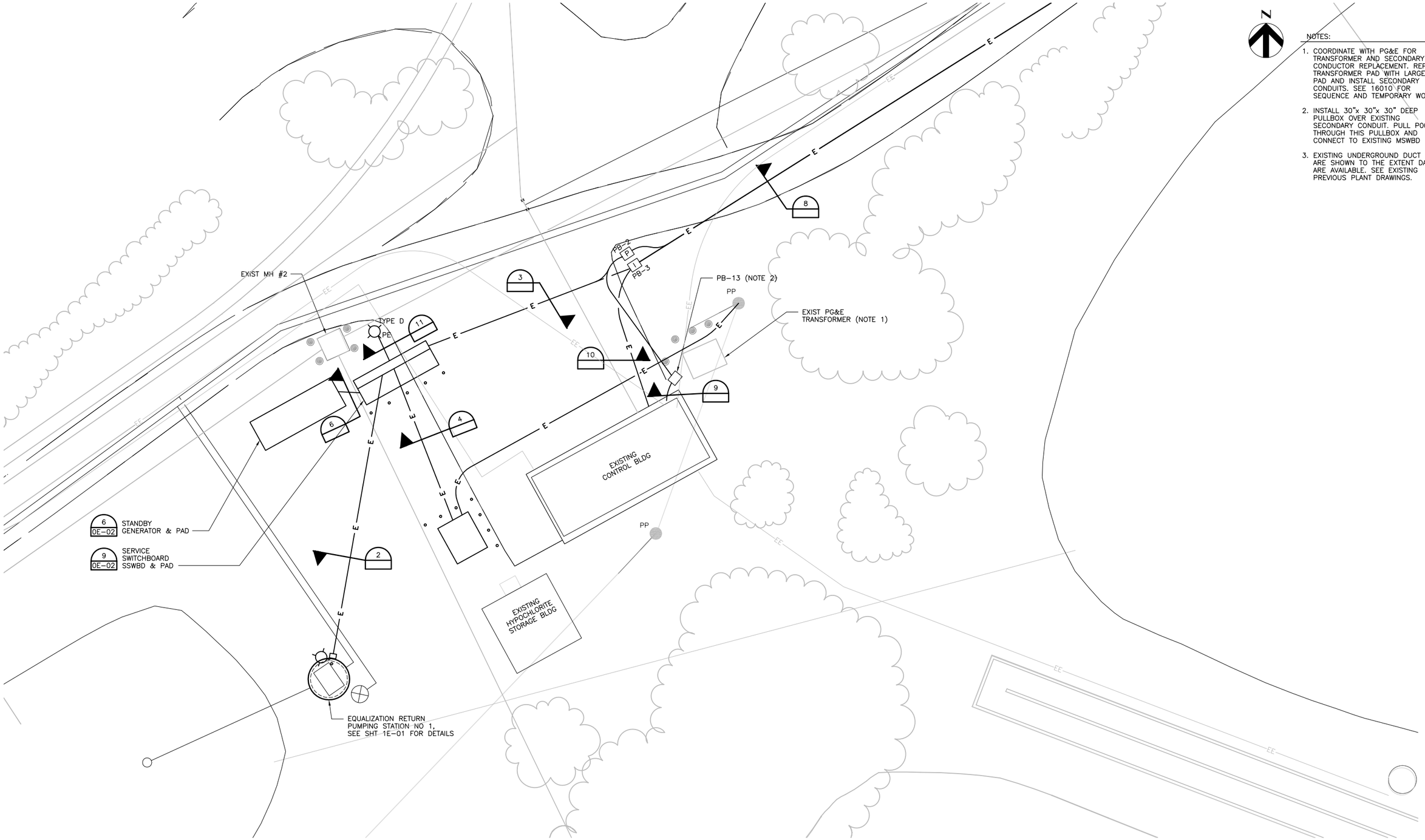

NOTES:

1. COORDINATE WITH PG&E FOR TRANSFORMER AND SECONDARY CONDUCTOR REPLACEMENT. REPLACE TRANSFORMER PAD WITH LARGER PAD AND INSTALL SECONDARY CONDUITS. SEE 16010 FOR SEQUENCE AND TEMPORARY WORK.
2. INSTALL 30"x 30"x 30" DEEP PULLBOX OVER EXISTING SECONDARY CONDUIT. PULL P008 THROUGH THIS PULLBOX AND CONNECT TO EXISTING MSWBD LUGS.
3. EXISTING UNDERGROUND DUCT BANKS ARE SHOWN TO THE EXTENT DATA ARE AVAILABLE. SEE EXISTING PREVIOUS PLANT DRAWINGS.

HDR

HDR Engineering, Inc.

ISSUE	DATE	DESCRIPTION
1	1/27/10	CORRECTED PER CONSTRUCTION RECORDS
0	7/27/07	CONFORMED FOR CONSTRUCTION
		(INCLUDES ADDENDA No. 1)
A	3/21/07	ISSUED FOR BIDS

PROJECT MANAGER	CRAIG A. OLSON
DESIGNED	W. ETTLICH
DESIGNED	A. LAROUERE
CHECKED	L. SMITHEY
DRAWN	P. VAN MEURS
DATE	MARCH 2007
PROJECT NUMBER	202087-30333

CITY OF COLFAX

WASTEWATER TREATMENT PLANT
UPGRADE PROJECT

ENLARGED SITE ELECTRICAL PLAN

0 1" 2"

FILENAME	30333-0E-09.dwg
SCALE	1" = 10'

SHEET
0E-09

C:\PWworking\SAC\dms17107\30333-0E-09.dwg, Layout1, 1/29/2010 12:59:07 PM
FILE: C:\PWworking\SAC\dms17107\30333-0E-09.dwg
DATE: 01/29/10 12:59:08pm, pvanmeu

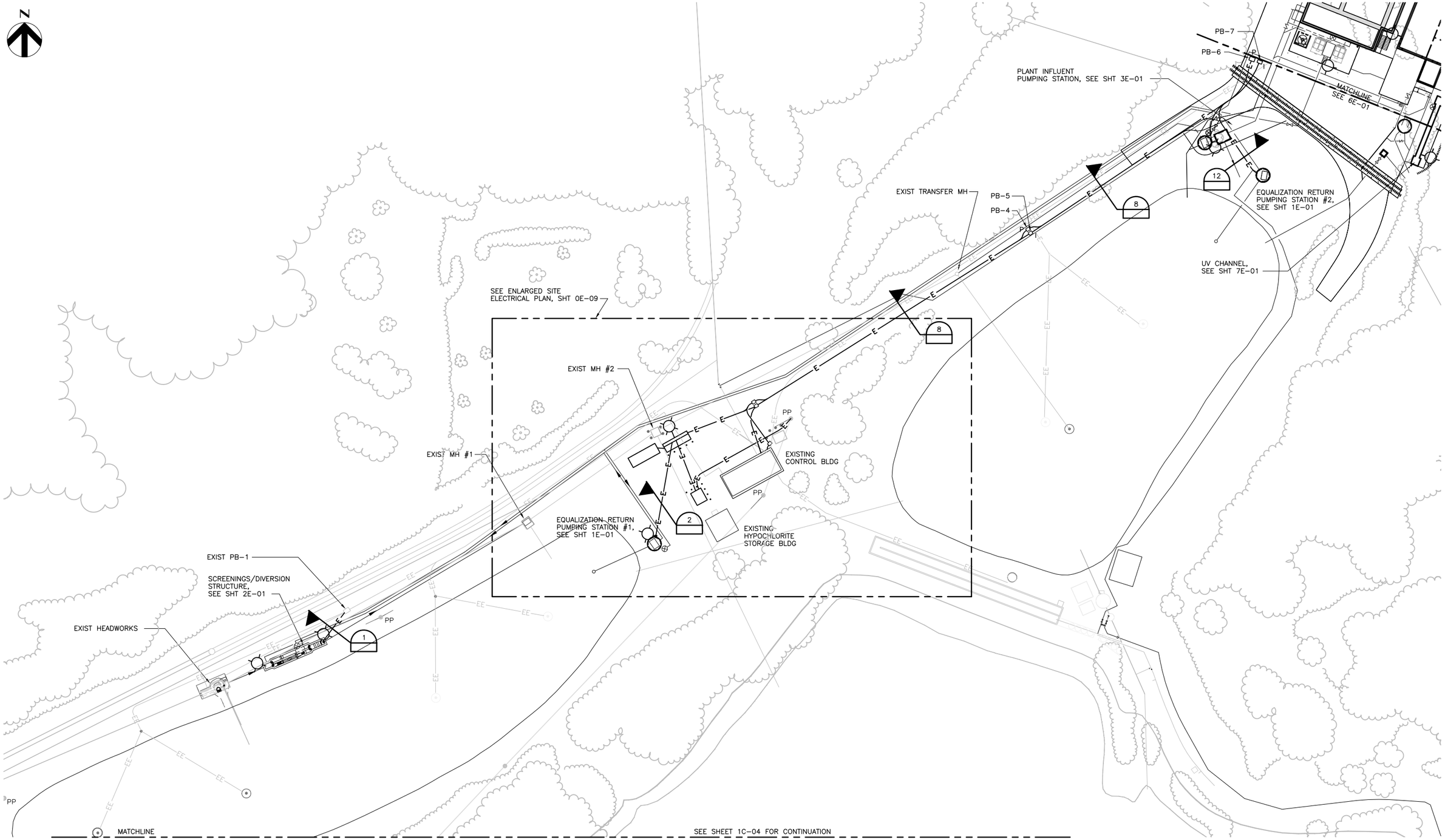

C:\PWworking\SAC\dms17107\30333-0E-10.dwg, Layout1, 1/29/2010 1:22:03 PM

FILE: C:\PWworking\SAC\dms17107\30333-0E-10.dwg
DATE: 01/29/10 01:22:04pm, pvanmeu

HDR
HDR Engineering, Inc.

ISSUE	DATE	DESCRIPTION
1	1/27/10	CORRECTED PER CONSTRUCTION RECORDS
0	7/27/07	CONFORMED FOR CONSTRUCTION
		(INCLUDES ADDENDA No. 1)
A	3/21/07	ISSUED FOR BIDS

PROJECT MANAGER	CRAIG A. OLSON
DESIGNED	W. ETTLICH
DESIGNED	A. LAROUERE
CHECKED	L. SMITHEY
DRAWN	P. VAN MEURS
DATE	MARCH 2007
PROJECT NUMBER	202087-30333

CITY OF COLFAX

WASTEWATER TREATMENT PLANT
UPGRADE PROJECT

SITE ELECTRICAL PLAN

0 1" 2"

FILENAME	30333-0E-10.dwg
SCALE	1" = 30'

SHEET
0E-10

DUCT BANK SCHEDULE

SECTION	POWER SIZE	POWER CONDUIT	CONTROL SIZE	CONTROL CONDUIT	SPARE SIZE	SPARE CONDUIT
1	2 – 3/4"	P001 P002			1"	P003, STUB UP & CAP AT EDGE OF STRUCTURE
2	2 – 3/4"	P004 P005	1" 1"	C007 C008		
3	2 – 2 1/2"	P012A P012B	2"	C004	2 2	P013 P014
4 PG&E	2 – 5"	P007A P007B P007C				
5	4"	P008	1"	C001A C001B		
6	2½" 2½" ¾" ¾"	P009A P009B P010 P011	1" 1"	C001B C005		
7	4" 4" 4" 4"	P007A P007B P007C P008	1"	C001A C001B		
8	2 1/2" 2 1/2"	P012A P012B	2"	C002	2" 2" 2"	C012 P013 P014
9	EXIST	P008	1"	C001A C001B		
10			2"	C002	2"	C012
11	3/4"	P019				
12	1" 1" 1" 1"	P018 P020 P021 P022	1" 1" 1" 1" 1"	C003 C006 C009 C010 C011		
13	1" 1"	P020 P021				
14	2 1/2" 2 1/2" 1" 1" 1" 1"	P012A P012B P018 P020 P021 P022	2" 1" 1" 1" 1" 1"	C002 C003 C006 C009 C010 C011	2" 2" 2"	C012 P013 P014

UNDERGROUND DUCT BANK CONDUIT SCHEDULE

TAG ID	FROM	TO	CONDUCTORS
P001	SCREEN LCP	PB–1	PULL BACK EXISTING 3#10, 1#12G, 2#12 FROM COMMINUTOR AND EXTEND TO SCREEN LCP
P002	SCEENING/ DIVERSION STRUCTURE	PB–1	3#10, 1#12G SPLICE TO EXISTING 3#10, 1#12G LIGHT & OUTLET & CIRCUIT IN PB–1 USING WP SPLICES
P003	SCREENING/ DIVERSION STRUCTURE	PB–1	PULL CORD
P004	RETURN PUMP 1	SERVICE SWBD	3#10, 1#10G
P005	RPS 1 LIGHTS AND OUTLET	PANEL SSWBD	3#10, 1#10G
P006	TAKE OFF POLE	PG&E TRANSFORMER, PER PG&E SPECS	BY PG&E
P007A P007B P007C	PG&E TRANSFORMER	SERVICE SWBD, PER PG&E SPECS	BY PG&E
P008	SERICE SWBD	PB–14 AND EXST MSWBD	3#500 KCMIL, 1#4/0N, 1#3G
P009A P009B	STANDBY GENERATOR	SERVICE SWBD	4#4/0, 1#2/0G
P010	SERVICE SWBD	GENERATOR BLOCK HEATER	2#12, 1#12G
P011	SERVICE SWBD	GENERATOR BATT CHARGER	2#12, 1#12G
P012A	SERVICE SWBD	MCC–D	3–250 KCMIL, 1#1/0N, 1#2G
P012B	SERVICE SWBD	MCC–D	3–250 KCMIL, 1#1/0N, 1#2G
P013	SERVICE SWBD	MCC–D	PULL CORD
P014	SERVICE SWBD	MCC–D	PULL CORD
P015			
P016	PB–8	SERVICE SWBD	PULL CORD
P017	PB–8	SERVICE SWBD	PULL CORD
P018	INFLUENT PS LIGHTS & OUTLET	PANEL–UV	3#10, 1#10G
P019	PANEL–SWBD	LIGHT	2#12, 1#12G
P020	RETURN PUMP 2	MCC–D	3#10, 1#10G
P021	INFLUENT PUMP 1	MCC–D	3#10, 1#10G
P022	INFLUENT PUMP 2	MCC–D	3#10, 1#10G
C001A	PG&E METER	TELE BOARD	
C001B	GENERATOR	AUTODIALER	2#14
C002	DEWATERING BUILDING TELEPHONE TERMINAL	EXISTING TELEPHONE TERMINAL & AUTODIALER	6 PR TELEPHONE 2–CAT6 CABLES, 2#14
C003	RETURN PUMP 2	MCC–D	TSP
C004	SERVICE SWBD	PB–3	PULL CORD, 2#14
C005	GENERATOR	ATS	2#12
C006	RETURN PUMP 2	MCC–D	4#12
C007	RETURN PUMP 1	SERVICE SWBD	4#12
C008	RETURN PUMP 1	SERVICE SWBD	TSP
C009	INFLUENT PS	CD–3	2–TSP
C010	INFLUENT PS	MCC–D	2–TSP
C011	INFLUENT PS	MCC–D	8#12
C012	DEWATERING BLDG TELE TERMINAL	EXIST TELE TERMINAL	PULLCORD

PULLBOX SCHEDULE

PB	MINIMUM SIZE	LOADING
1	EXISTING	EXISTING
2	30"x24"x24"D	H–20
3	24"x12"x24"D	H–20
4	30"x24"x24"D	H–20
5	24"x12"x24"D	H–20
6	30"x24"x24"D	H–20
7	24"x12"x24"D	H–20
8	24"x12"x24"D	LIGHT TRAFFIC
9	24"x12"x24"D	LIGHT TRAFFIC
10	24"x12"x24"D	LIGHT TRAFFIC
11	24"x12"x24"D	LIGHT TRAFFIC
12	24"x12"x24"D	LIGHT TRAFFIC
13	30"x30"x30"D	H–20

C:\PWworking\SAC\dms17107\30333-0E-11.dwg, Layout1, 1/29/2010 1:44:52 PM
FILE: C:\PWworking\SAC\dms17107\30333-0E-11.dwg
DATE: 01/29/10 01:44:54pm, pcorrea

HDR Engineering, Inc.

ISSUE	DATE	DESCRIPTION
1	1/27/10	CORRECTED PER CONSTRUCTION RECORDS
0	7/27/07	CONFORMED FOR CONSTRUCTION
		(INCLUDES ADDENDA No. 1)
A	3/21/07	ISSUED FOR BIDS

PROJECT MANAGER	CRAIG A. OLSON
DESIGNED	
DESIGNED	
CHECKED	
DRAWN	N. RIZZATO
DATE	MARCH 2007
PROJECT NUMBER	202087–30333

CITY OF COLFAX
WASTEWATER TREATMENT PLANT UPGRADE PROJECT

ELECTRICAL DUCT BANK SCHEDULE, CONDUIT SCHEDULE AND PULLBOX SCHEDULE

0 1" 2"

FILENAME	30333–0E–11.dwg
SCALE	NONE

SHEET **0E-11**

APPENDIX C

CITY OF COLFAX STANDARD CONSTRUCTION AGREEMENT

AGREEMENT FOR CONTRACT SERVICES

THIS AGREEMENT is made and entered into on this **_____ of _____, 2021** by and between the City of Colfax, a municipal corporation of the State of California ("City") and **_____**. ("Contractor".)

RECITALS

A. The City desires to retain Contractor to provide the Services set forth in detail in **Exhibit A** hereto (the "Services") subject to the terms and conditions of this Agreement.

B. Contractor is duly licensed and sufficiently experienced to undertake and perform the Services in a skilled and workmanlike manner and desires to do so in accordance with the terms and conditions of this Agreement.

Now, therefore, in consideration of the mutual covenants, promises and conditions set forth in this Agreement, the City and Contractor agree as follows:

Section 1. Services.

Subject to the terms and conditions set forth in this Agreement, Contractor shall furnish and perform all of the Services described in detail in Exhibit A hereto and incorporated herein by this reference (the "Services") to the satisfaction of the City. Contractor shall not perform any work exceeding the scope of the Services described in Exhibit A without prior written authorization from the City.

Section 2. Time of Completion.

Contractor's schedule for performance of the Services is set forth in Exhibit A hereto which is incorporated herein by this reference. Contractor shall commence performance of the Services promptly upon receipt of written notice from the City to proceed. Performance of the Services shall progress and conclude in accordance with the schedule set forth in Exhibit A. During the performance of the Services, Contractor shall provide the City with written progress reports at least once each month and at such additional intervals as City may from time to time request.

Section 3. Compensation.

A. Except as may otherwise be provided in Exhibit A or elsewhere in this Agreement or its exhibits, Contractor shall invoice City once each month for the Services performed during the preceding month. Such invoices shall itemize all charges in such detail as may reasonably be required by City in the usual course of City business but shall include at least (i) the date of performance of each of the Services, (ii) identification of the person who performed the Services, (iii) a detailed description of the Services performed on each date, (iv) the hourly rate at which the Services on each date are charged, (v) an itemization of all costs incurred and (vi) the total charges for the Services for the month invoiced. As long as the Contractor performs the Services to the satisfaction of the City, the City shall pay the Contractor an all inclusive compensation that shall

not exceed the amount as detailed in Exhibit A except pursuant to an authorized written change order issued pursuant to Section 15 of this Agreement before the Services requiring additional compensation are performed. City shall pay Contractor no later than thirty (30) days after approval of the monthly invoice by City's staff.

B. The Contractor's compensation for the Services shall be full compensation for all indirect and direct personnel, materials, supplies, equipment and services incurred by the Contractor and used in carrying out or completing the Services. Payments shall be in accordance with the payment schedule established in Exhibit A or elsewhere in this Agreement or its exhibits.

C. The City shall have the right to receive, upon request, documentation substantiating charges billed to the City pursuant to this Agreement. The City shall have the right to perform an audit of the Contractor's relevant records pertaining to the charges.

D. Any Services performed more than sixty (60) days prior to the date upon which they are invoiced to the City shall not be compensable.

Section 4. Professional Ability; Standard of Quality.

City has relied upon the professional training and ability of Contractor to perform the Services described in Exhibit A as a material inducement to enter into this Agreement. Contractor shall therefore provide properly skilled professional and technical personnel to perform all Services under this Agreement. All Services performed by Contractor under this Agreement shall be in a skillful, workmanlike manner in accordance with applicable legal requirements and shall meet the standard of quality ordinarily to be expected of competent professionals in Contractor's field of expertise.

Section 5. Indemnification.

Contractor shall hold harmless and indemnify, including without limitation the cost to defend, the City and its officers, agents and employees from and against any and all claims, demands, damages, costs or liability that arise out of, or pertain to, or relate to the negligence, recklessness or willful misconduct of Contractor and/or its agents in the performance of the Services. This indemnity does not apply to liability for damages for death or bodily injury to persons, injury to property, or other loss, arising from the sole negligence, willful misconduct or material defects in design by the City or its agents, servants employees or independent contractors other than Contractor who are directly responsible to the City, or arising from the active negligence of the City officers, agents, employees or volunteers

Section 6. Insurance.

Without limiting Contractor's indemnification obligations provided for above, Contractor shall take out before beginning performance of the Services and maintain at all times during the life of this Agreement the following policies of insurance with insurers possessing a Best rating of not less than A. Contractor shall not allow any subcontractor, professional or otherwise, to commence work on any subcontract until all insurance required of the Contractor has also been obtained by the

subcontractor.

A. Workers' Compensation Coverage. Statutory Workers' Compensation insurance and Employer's Liability Insurance to cover its employees. In the alternative, Contractor may rely on a self-insurance program to meet its legal requirements as long as the program of self-insurance complies fully with the provisions of the California Labor Code. Contractor shall also require all subcontractors, if such are authorized by the City, to similarly provide Workers' Compensation insurance as required by the Labor Code of the State of California for all of the subcontractor's employees. All Workers' Compensation policies shall be endorsed with the provision that the insurance shall not be suspended, voided, or cancelled until thirty (30) days prior written notice has been provided to City by the insurer. The Workers' Compensation insurance shall also contain a provision whereby the insurance company agrees to waive all rights of subrogation against the City and its elected or appointed officials, officers, agents, and employees for losses paid under the terms of such policy which arise from the Services performed by the insured for the City.

B. General Liability Coverage. General liability insurance, including personal injury and property damage insurance for all activities of the Contractor and its subcontractors, if such are authorized by the City, arising out of or in connection with the Services. The insurance shall be written on a comprehensive general liability form and include a broad form comprehensive general liability endorsement. In the alternative, the City will accept, in satisfaction of these requirements, commercial general liability coverage which is equivalent to the comprehensive general liability form and a broad form comprehensive general liability endorsement. The insurance shall be in an amount of not less than $1 million combined single limit personal injury and property damage for each occurrence. The insurance shall be occurrence based insurance. General liability coverage written on a claims made basis shall not be acceptable absent prior written authorization from the City.

C. Automobile Liability Coverage. Automobile liability insurance covering bodily injury and property damage for all activities of the Contractor arising out of or in connection with this Agreement, including coverage for owned, hired and non-owned vehicles, in an amount of not less than $1 million combined single limit for each occurrence.

D. Policy Endorsements. Each general liability and automobile liability insurance policy shall be endorsed with the following provisions:

1. The City, and its elected or appointed officials, employees and agents shall be named as insureds or additional insureds with regard to damages and defenses of claims arising from activities performed by or on behalf of the Contractor.

2. The insurance afforded by each policy shall apply separately to each insured who is seeking coverage or against whom a claim is made or a suit is brought, except with respect to the insurer's limits of liability.

3. The insurance shall be primary insurance as respects the City and its elected or appointed officers, officials, employees and agents. Any other insurance maintained by

the City or its elected or appointed officers, officials, employees, agents or volunteers shall be in excess of this insurance and shall not contribute with it.

4. The insurance shall not be suspended, voided, cancelled, or reduced in coverage or in limits except after thirty (30) days prior written notice has been provided to the City.

5. Any failure to comply with the reporting requirements of any policy shall not affect coverage provided to the City, its elected or appointed officers, officials, employees, or agents.

E. Professional Liability Coverage. If required by the City, Contractor shall also take out and maintain professional liability, errors and omissions insurance in an amount not less than $1 million. The professional liability insurance policy shall be endorsed with a provision stating that it shall not be suspended, voided, cancelled, or reduced in coverage or in limits except after thirty (30) days written notice has been provided to the City.

F. Insurance Certificates and Endorsements. Prior to commencing the Services under this Agreement, Contractor shall submit to the City documentation evidencing the required insurance signed by the insurance agent and the companies named. This documentation shall be on forms which are acceptable to the City and shall include all required endorsements and verify that coverage is actually in effect. This Agreement shall not be effective until the required insurance forms and endorsements are submitted to and approved by the City. Failure to provide these forms within the time period specified by City may result in the award of this Agreement to another Contractor should the City, in its sole discretion, decide to do so. Current certification of insurance shall be kept on file with the City at all times during the term of this Agreement.

G. Deductible and Self-Insured Retentions. Any deductibles or self-insured retentions must be declared to and approved by City.

H. Termination of Insurance. If the City receives notification that Contractor's insurance will be suspended, voided, cancelled or reduced in coverage or in limits, and if the Contractor does not provide for either the reinstatement of that insurance or for the furnishing of alternate insurance containing all of the terms and provisions specified above prior to the termination of that insurance, City may either terminate this Agreement for that breach, or City may secure the required insurance to satisfy the conditions of this Agreement and deduct the cost thereof from compensation which would otherwise be due and payable to the Contractor for Services rendered under the terms of this Agreement.

Section 7. Subcontracts.

Contractor may not subcontract any portion of the Services without the written authorization of City. If City consents to a subcontract, Contractor shall be fully responsible to the City and third parties for all acts or omissions of the subcontractor to which the Services or any portion thereof are subcontracted. Nothing in this Agreement shall create any contractual relationship between City and any subcontractor, nor shall it create any obligation on the part of the City to pay or cause the

payment of any monies due to any such subcontractor except as otherwise is required by law.

Section 8. Assignment.

Contractor shall not assign any right or obligation under this Agreement without the City's prior written consent. Any attempted assignment of any right or obligation under this Agreement without the City's prior written consent shall be void.

Section 9. Entire Agreement.

This Agreement represents the entire understanding of City and Contractor as to those matters contained herein. No prior oral or written understanding shall be of any force or effect with respect to those matters covered herein. This Agreement may not be modified or altered except in writing signed by both parties.

Section 10. Jurisdiction.

This Agreement shall be administered and interpreted under the laws of the State of California. Jurisdiction over any litigation arising from this Agreement shall be in the Superior Court of the State of California with venue in Placer County, California.

Section 11. Suspension of Services.

Upon written request by Contractor, City may suspend, in writing, all or any portion of the Services if unforeseen circumstances beyond the control of the City and Contractor make normal progress of the Services impossible, impractical or infeasible. Upon written City approval to suspend performance of the Services, the time for completion of the Services shall be extended by the number of days performance of the Services is suspended.

Section 12. Termination of Services.

City may at any time, at its sole discretion, terminate all or any portion of the Services and this Agreement upon seven (7) days written notice to Contractor. Upon receipt of notice of termination, Contractor shall stop performance of the Services at the stage directed by City. Contractor shall be entitled to payment within thirty (30) days for Services performed up to the date of receipt of the written notice of termination. Contractor shall not be entitled to payment for any Services performed after the receipt of the notice of termination unless such payment is authorized in advance in writing by the City.

Should Contractor fail to perform any of the obligations required of Contractor within the time and in the manner provided for under the terms of this Agreement, or should Contractor violate any of the terms and conditions of this Agreement, City may terminate this Agreement by providing Contractor with seven (7) days written notice of such termination. The Contractor shall be compensated for all Services performed prior to the date of receipt of the notice of termination. However, the City may deduct from the compensation which may be owed to Contractor the amount of damage sustained or estimated by City resulting from Contractor's breach of this

Agreement.

Contractor's obligations pursuant to Sections 5 and 6 of this Agreement shall survive termination, and continue in effect for as long as necessary to fulfill the purposes of Sections 5 and 6.

Section 13. Independent Contractor.

Contractor shall in all respects be an independent contractor and not an agent or employee of City. Contractor has and shall retain the right to exercise full control and supervision of the means and methods of performing the Services. Contractor shall receive no premium or enhanced pay for Services normally understood as overtime; nor shall Contractor receive holiday pay, sick leave, administrative leave or pay for any other time not actually expended in the performance of the Services. It is intended by the parties that Contractor shall not be eligible for benefits and shall receive no compensation from the City, except as expressly set forth in this Agreement. Contractor shall submit completed W-9 and Report of Independent Contractor forms upon execution of this Agreement and prior to the payment of any compensation hereunder.

Section 14. Ownership of Documents.

Within thirty (30) days after the Contractor substantially completes performance of the Services, or within thirty (30) days after the termination of this Agreement, the Contractor shall deliver to the City all files, records, materials and documents drafted or prepared by Contractor's in the performance of the Services. It is expressly understood and agreed that all such files, records, materials and documents are the property of the City and not the property of the Contractor. All finished and unfinished reports, plans, studies, documents and other writings prepared by and for Contractor, its officers, employees and agents in the course of performing the Services shall become the sole property of the City upon payment to Contractor for the Services, and the City shall have the exclusive right to use such materials in its sole discretion without further compensation to Contractor or to any other party. Contractor shall, at Contractor's expense, provide such reports, plans, studies, documents and writings to City or any party the City may designate, upon written request. Contractor may keep file copies of all documents prepared for City. Use of any such documents by the City for projects that are not the subject of this Agreement or for purposes beyond the scope of the Services shall be at the City's sole risk without legal liability or expense to Contractor.

Section 15. Changes and/or Extra Work.

Only the City Council may authorize extra and/or changed Services, modification of the time of completion of the Services, or additional compensation for the tasks to be performed by Contractor. Contractor expressly recognizes that other City personnel are without authorization to order extra and/or changed Services or to obligate the City to the payment of additional compensation. The failure of Contractor to secure the prior written authorization for such extra and/or changed Services shall constitute a waiver of any and all right to adjustment in the contract price due to such unauthorized Services, and Contractor thereafter shall not be entitled to any compensation whatsoever for the performance of such extra or changed Services. In the event Contractor and City agree that extra and/or changed Services are required, or that additional compensation shall be

awarded to Contractor for performance of the Services under this Agreement, a supplemental agreement providing for such compensation shall be prepared and shall be executed by the Contractor and the necessary City officials before the extra and/or changed Services are provided.

Section 16. Compliance with Federal, State and Local Laws.

Contractor shall comply with all applicable federal, state and local laws, statutes, ordinances, rules and regulations affecting the Services, including without limitation laws requiring licensing and prohibiting discrimination in employment because of race, creed, color, sex, age, marital status, physical or mental disability, national origin or other prohibited bases. City shall not be responsible or liable for Contractor's failure to comply with applicable laws, statutes, ordinances, rules or regulations.

Section 17. Retention of Records.

Contractor and any subcontractors authorized by the terms of this Agreement shall keep and maintain full and complete documentation and accounting records, employees' time sheets, and correspondence pertaining to the Services, and Contractor shall make such documents available for review and/or audit by City and City's representatives at all reasonable times during performance of the Services and for at least four (4) years after completion of the Services and/or termination of this Agreement.

Section 18. Alternative Dispute Resolution

A. Before resorting to mediation, arbitration or other legal process, the primary contacts of the parties shall meet and confer and attempt to amicably resolve any dispute arising from or relating to this Agreement subject to the following provisions. Any party desiring to meet and confer shall so advise the other party pursuant to a written notice. Within 15 days after provision of that written notice by the party desiring to meet and confer, the primary contacts for each party shall meet in person and attempt to amicably resolve their dispute. Each primary contact, or the person acting in their absence with full authority to resolve the dispute, shall attend the meeting and shall be prepared to devote an entire day thereto. If any dispute remains unresolved at the end of the meeting, any party to this Agreement shall have the right to invoke the mediation process provided for in the subparagraph B below.

B. Subject to the provisions of subparagraph A, any dispute that remains unresolved after the meet and confer shall immediately be submitted to non-binding neutral mediation, before a mutually acceptable, neutral retired judge or justice at the Sacramento Office of the Judicial Arbitration and Mediation Service ("JAMS"). If within five days after the meet and confer the parties are unable to agree upon the selection of a neutral mediator, then the first available retired judge or justice at the Sacramento office of JAMS shall serve as the neutral mediator. The parties agree to commit to at least one full day to the mediation process. Additionally, to expedite the resolution of any dispute that is not resolved by mediation, the parties agree to each bring to the neutral mediation a list of at least five neutral arbitrators, including their resumes, whose availability for an arbitration hearing within 30 days after the mediation has been confirmed.

C. If mediation is unsuccessful, before the mediation concludes, the parties shall mediate the selection of a neutral arbitrator to assist in the resolution of their dispute. If the parties are unable to agree on an arbitrator, the parties agree to submit selection of an arbitrator to the mediator, whose decision shall be binding on the parties. In that case, the mediator shall select a neutral arbitrator from the then active list of retired judges or justices at the Sacramento Office of the JAMS. The arbitration shall be conducted pursuant to the provisions of the California Arbitration Act, sections 1280-1294.2 of the California Code of Civil Procedure. In such case, the provisions of Code of Civil Procedure Section 1283.05 and 1283.1 shall apply and are hereby incorporated into this Agreement.

D. This section 18 shall survive the termination or expiration of this Agreement. If there is no Sacramento office of JAMS, then the office of JAMS closest to the City shall be used instead of a Sacramento office.

Section 19. Severability.

The provisions of this Agreement are severable. If any portion of this Agreement is held invalid by an arbitrator or by a court of competent jurisdiction, the remainder of the Agreement shall remain in full force and effect unless amended or modified by the mutual written consent of the parties.

Section 20. Entire Agreement; Amendment.

This Agreement, including all exhibits hereto, constitutes the complete and exclusive expression of the understanding and agreement between the parties with respect to the subject matter hereof. All prior written and oral communications, including correspondence, drafts, memoranda, and representations, are superseded in total by this Agreement. This Agreement may be amended or extended from time to time only by written agreement of the parties hereto.

Section 21. Time of the Essence.

Time is of the essence in the performance of the Services. The Contractor will perform its Services with due and reasonable diligence consistent with sound professional practices and shall devote such time to the performance of the Services as may be necessary for their timely completion.

Section 22. Written Notification.

Except as otherwise specified in this Agreement, any notice, demand, request, consent, approval or communications that either party desires or is required to give to the other party shall be in writing and either served personally or sent by first class mail, postage prepaid and addressed as follows. Either party may change its address by notifying the other party in writing of the change of address. Notice shall be deemed communicated within two business days from the time of mailing if mailed within the State of California as provided in this Section.

If to City: City of Colfax
33 S. Main Street
Colfax, CA 95713

If to Contractor:

Section 23. Execution.

This Agreement may be executed in original counterparts, each of which shall constitute one and the same instrument and shall become binding upon the parties when at least one original counterpart is signed by both parties hereto. In proving this Agreement, it shall not be necessary to produce or account for more than one such counterpart.

Section 24. Successors. This Agreement shall be binding on and inure to the benefit of the respective parties hereto except to the extent of any contrary provision in this Agreement.

Section 25. Attorney's Fees. If any party to this Agreement commences legal proceedings to enforce any of its terms or to recover damages for its breach, the prevailing party shall be entitled to recover its reasonable attorney's fees, costs and the expenses of expert witnesses, including any such fees costs and expenses incurred on appeal.

IN WITNESS WHEREOF, the parties hereby have executed this Agreement on the day first above written:

CITY	CONTRACTOR
Signature_____	Signature_____
Printed Name_____	Printed Name_____
Title_____	Title_____
Date_____	Date_____

APPROVED AS TO FORM:

_____

City Attorney