PROJECT PLANS FOR
CITY OF COLFAX
LIFT STATION 5
FORCE MAIN IMPROVEMENTS
SEPTEMBER 2021
CITY OF COLFAX
PLACER COUNTY, CALIFORNA

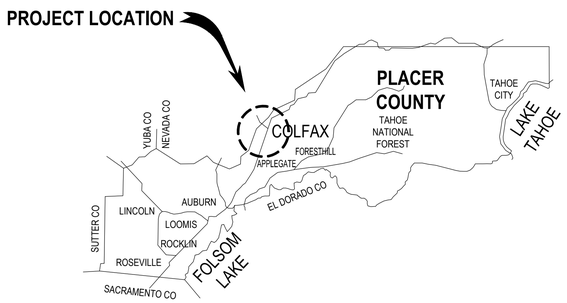

VICINITY MAP
NOT TO SCALE

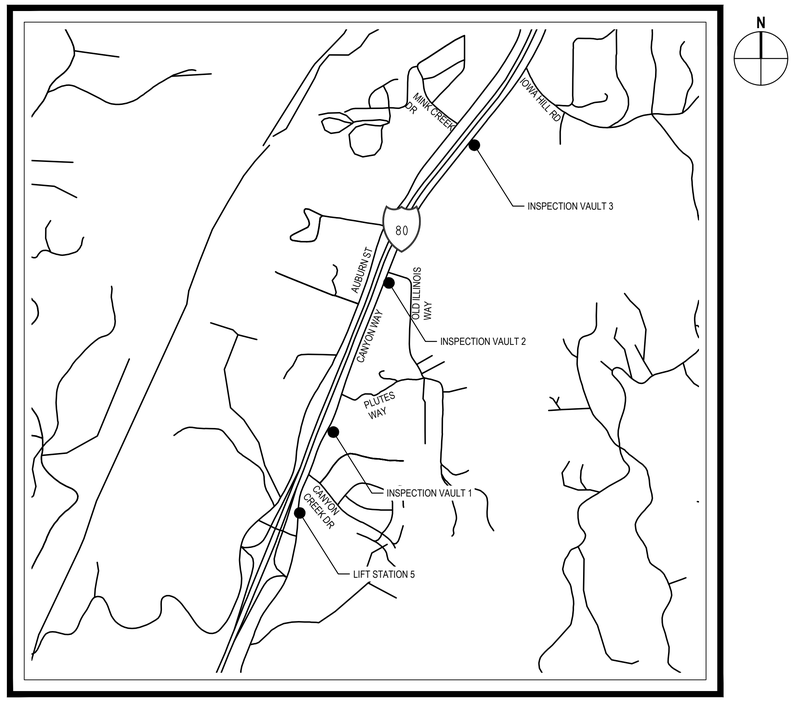

LOCATION MAP
NOT TO SCALE

INDEX OF SHEETS

SHEET NO.	DRAWING NO.	DRAWING TITLE
1	G1	COVER SHEET
2	G2	NOTES, LEGEND, AND ABBREVIATIONS
3	C1	INSPECTION VAULT LOCATION PLAN
4	C2	EXISTING 6" FORCE MAIN AND INSPECTION VAULT DETAIL PLAN
5	M1	DETAILS
6	E1	ELECTRICAL SITE PLAN
7	E2	ELECTRICAL DETAILS
8	I1	LIFT STATION 5 P&ID

CITY OF COLFAX

APPROVED BY DATE _____

CARL MOORE
City Engineer
RCE 62181

No.	Issue	Checked	Approved	Date

Author PE | Drafting Check SD | Project Manager CR
Designer SD | Design Check FG | Project Director LW

CITY OF COLFAX

Bar is one inch on original size sheet
0 1"

REGISTERED PROFESSIONAL ENGINEER CASEY L. RAINES No. C76715 Exp. 12-31-22 CIVIL STATE OF CALIFORNIA

GHD Inc.
943 Reserve Drive, Suite 100
Roseville California 95678 USA
T 1 916 782 8688
www.ghd.com

Conditions of Use
This document and the ideas and designs incorporated herein, as an instrument of professional service, is the property of GHD. This document may only be used by GHD's client (and any other person who GHD has agreed can use this document) for the purpose for which it was prepared and must not be used by any other person or for any other purpose.

Client CITY OF COLFAX
Project LIFT STATION 5 FORCE MAIN IMPROVEMENTS
Title COVER SHEET
Size ARCH D
Project No. 11201706 | Date SEPTEMBER 2021 | Scale AS SHOWN
Sheet No. G1 | Sheet 1 of 8

GENERAL NOTES:

1. EXCAVATIONS OVER FIVE FEET (5') DEEP REQUIRE AN EXCAVATION PERMIT FROM THE STATE DEPARTMENT OF INDUSTRIAL SAFETY.

2. CONTRACTOR SHALL CALL "UNDERGROUND SERVICE ALERT" AT 811 (800-227-2600) AT LEAST 48 HOURS PRIOR TO START OF CONSTRUCTION FOR LOCATING UNDERGROUND UTILITIES.

3. CONSTRUCTION CONTRACTOR AGREES THAT IN ACCORDANCE WITH GENERALLY ACCEPTED CONSTRUCTION PRACTICES, CONSTRUCTION CONTRACTOR WILL BE REQUIRED TO ASSUME SOLE AND COMPLETE RESPONSIBILITY FOR JOB SITE CONDITIONS DURING THE COURSE OF CONSTRUCTION OF THE PROJECT, INCLUDING SAFETY OF ALL PERSONS AND PROPERTY; THAT THIS REQUIREMENT SHALL BE MADE TO APPLY CONTINUOUSLY AND NOT BE LIMITED TO NORMAL WORKING HOURS, AND CONSTRUCTION CONTRACTOR FURTHER AGREES TO DEFEND, INDEMNIFY AND HOLD DESIGN PROFESSIONAL HARMLESS FROM ANY AND ALL LIABILITY, REAL OR ALLEGED, IN CONNECTION WITH THE PERFORMANCE OF WORK ON THIS PROJECT, EXCEPTING LIABILITY ARISING FROM THE SOLE NEGLIGENCE OF THE DESIGN PROFESSIONAL.

4. UNAUTHORIZED CHANGES & USES: THE ENGINEER PREPARING THESE PLANS WILL NOT BE RESPONSIBLE FOR, OR LIABLE FOR, UNAUTHORIZED CHANGES TO OR USES OF THESE PLANS. ALL CHANGES TO THE PLANS MUST BE IN WRITING AND MUST BE APPROVED BY THE PREPARER OF THESE PLANS.

5. NOTICE TO CONTRACTORS: THE EXISTENCE AND LOCATION OF ANY UNDERGROUND UTILITY LINES OR STRUCTURES SHOWN ON THESE PLANS WERE OBTAINED BY A SEARCH OF AVAILABLE RECORDS. THE CONTRACTOR IS REQUIRED TO TAKE DUE PRECAUTIONARY MEASURES TO PROTECT THE UTILITY LINES SHOWN AND ANY OTHER LINES NOT OF RECORD OR NOT SHOWN ON THESE PLANS.

6. THE CONTRACTOR SHALL BE RESPONSIBLE FOR ANY DAMAGES TO CITY OWNED OR OTHER UTILITIES CAUSED BY HIS OPERATIONS.

7. THE CONTRACTOR SHALL BE RESPONSIBLE FOR OFF-SITE DISPOSAL OF ALL BITUMINOUS PAVEMENT, CONCRETE AND REINFORCEMENT, AND SPOILS NOT NEEDED FOR BACKFILL AS REQUIRED BY THE ENGINEER AND PER THE SPECIFICATIONS.

8. ALL CONSTRUCTION MATERIALS AND METHODS SHALL CONFORM TO THE REQUIREMENTS OF THE CURRENT COUNTY OF PLACER GENERAL SPECIFICATIONS. ALL REFERENCES TO STATE OF CALIFORNIA, DEPARTMENT OF TRANSPORTATION STANDARD SPECIFICATIONS SHALL REFER TO CURRENT EDITION OF THE STANDARD SPECIFICATIONS. ATTENTION IS ALSO DIRECTED TO THE STANDARD PLATES CONTAINED IN THE PLACER COUNTY LAND DEVELOPMENT MANUAL AND THE CURRENT EDITION OF THE CALTRANS STANDARD PLANS, WHICH, WHEN APPLICABLE, ARE INCLUDED IN THESE DRAWINGS AND/OR REFERENCED BY PLATE OR STANDARD PLAN NUMBER. CONTRACTOR IS RESPONSIBLE TO HAVE AVAILABLE A CURRENT SET OF PLACER COUNTY GENERAL SPECIFICATIONS WITH PLATES, CALTRANS STANDARD SPECIFICATIONS, AND CALTRANS STANDARD PLANS.

9. PUBLIC SAFETY AND TRAFFIC CONTROL SHALL BE PROVIDED IN ACCORDANCE WITH CITY REQUIREMENTS AND AS DIRECTED BY THE ENGINEER. SAFE VEHICULAR AND PEDESTRIAN ACCESS SHALL BE PROVIDED AT ALL TIMES DURING CONSTRUCTION.

10. CONTRACTOR MUST IMMEDIATELY REINSTALL ANY TRAFFIC SIGNS REMOVED IN THE COURSE OF CONSTRUCTION. ANY SIGNS LOST OR DAMAGED BY THE CONTRACTOR SHALL BE REPLACED OR REPAIRED BY THE CONTRACTOR AS DIRECTED BY THE ENGINEER.

11. THE CITY MAY REQUIRE THE CONTRACTOR TO UNCOVER ANY IMPROVEMENTS THAT HAVE BEEN COMPLETED WITHOUT PROPER CITY INSPECTION AND/OR APPROVAL. IF THE INSTALLATION IS FOUND NOT TO MEET CITY STANDARDS OR PREVIOUSLY APPROVED ALTERNATIVES SHOWN ON THE PLANS, THE CONTRACTOR MAY BE REQUIRED TO REMOVE AND REPLACE SUCH IMPROVEMENTS AT CONTRACTOR EXPENSE.

12. PRIOR TO ANY ACTIVITY WITHIN THE CITY RIGHT-OF-WAY, THE CONTRACTOR SHALL INSTALL C19(CA) OR C23(CA) SIGNS IN ACCORDANCE WITH CHAPTER 6 OF THE CURRENT CAMUTCD MANUAL. THE SIGNS SHALL BE PROFESSIONALLY MADE, METAL, REFLECTORIZED, AND PLACED ON WOODEN POSTS FOR THE DURATION OF THE PROJECT. THE MINIMUM SIZE SHALL BE 36". THE SIGNS SHALL BE REPLACED OR REPAIRED IF STOLEN OR DAMAGED. THE PLACEMENT, TYPE, AND LOCATION OF ALL TRAFFIC CONTROL DEVICES SHALL BE REVIEWED AND APPROVED BY THE ENGINEER. THE ENGINEER OR INSPECTOR SHALL DIRECT THE INSTALLATION OR CHANGES TO SIGNS, STRIPING, CONES, BARRICADES, ETC. DURING THE COURSE OF CONSTRUCTION FOR TRAFFIC SAFETY.

13. IF ANY ARCHEOLOGICAL ARTIFACTS. EXOTIC ROCK (NON-NATIVE), OR UNUSUAL AMOUNTS OF SHELL OR BONE ARE UNCOVERED DURING ANY ON-SITE CONSTRUCTION ACTIVITIES, ALL WORK MUST STOP IMMEDIATELY IN THE AREA AND A SOPA-CERTIFIED (SOCIETY OF PROFESSIONAL ARCHAEOLOGISTS) ARCHAEOLOGIST RETAINED TO EVALUATE THE DEPOSIT. THE CITY PLANNING DEPT. AND THE COUNTY DEPT. OF MUSEUMS MUST ALSO BE CONTACTED FOR REVIEW OF THE ARCHAEOLOGICAL FIND(S). IF THE DISCOVERY CONSISTS OF HUMAN REMAINS, THE PLACER COUNTY CORONER AND NATIVE AMERICAN HERITAGE COMMISSION MUST ALSO BE CONTACTED. WORK IN THE AREA MAY ONLY PROCEED AFTER AUTHORIZATION IS GRANTED BY THE CITY OF COLFAX PLANNING DEPARTMENT. FOLLOWING A REVIEW OF THE NEW FIND AND CONSULTATION WITH APPROPRIATE EXPERTS, IF NECESSARY, THE AUTHORITY TO PROCEED MAY BE ACCOMPANIED BY THE ADDITION OF DEVELOPMENT REQUIREMENTS WHICH PROVIDE PROTECTION OF THE SITE AND/OR ADDITIONAL MITIGATION MEASURES NECESSARY TO ADDRESS THE UNIQUE OR SENSITIVE NATURE OF THE SITE.

14. PRIOR TO THE START OF CONSTRUCTION THE CONTRACTOR SHALL PROVIDE THE CITY OF COLFAX A TRAFFIC PLAN IN ACCORDANCE WITH THE COUNTY SPECIFICATIONS.

15. TEMPORARY TRAFFIC STRIPING MUST BE PROVIDED BY THE CONTRACTOR IF EXISTING DELINEATION IS DESTROYED DURING CONSTRUCTION. PAINTED MARKING OR STRIPING TAPE MAY BE USED. THE TEMPORARY STRIPING MUST BE APPROVED FOR MATERIAL AND LAYOUT BY THE ENGINEER. ALL TEMPORARY PAINTED MARKINGS THAT ARE TO BE REMOVED SHALL BE SANDBLASTED BY THE CONTRACTOR AT THE EXPENSE OF THE CONTRACTOR.

16. ONLY THE APPROXIMATE LOCATION OF THE EXISTING STORM DRAINS AND WATER FACILITIES HAVE BEEN SHOWN. THE CONTRACTOR SHALL VERIFY EXACT LOCATION BY POTHOLING IN THE FIELD.

17. IF AT ANY TIME DURING THE COURSE OF CONSTRUCTING THE PROPOSED PROJECT EVIDENCE OF SOIL AND/OR GROUNDWATER CONTAMINATION WITH HAZARDOUS MATERIAL IS ENCOUNTERED, THE APPLICANT SHALL IMMEDIATELY STOP THE PROJECT AND CONTACT ENVIRONMENTAL HEALTH SERVICES HAZARDOUS MATERIAL SECTION. THE PROJECT SHALL REMAIN SUSPENDED UNTIL THERE IS A RESOLUTION OF THE CONTAMINATION PROBLEM TO THE SATISFACTION OF ENVIRONMENTAL HEALTH SERVICES AND TO THE REGIONAL WATER QUALITY CONTROL BOARD.

GENERAL NOTES (CONT.):

18. SCARIFY 6" OF SUBGRADE SHALL BE PAID FOR AS OBLITERATE SURFACING.

PAVING NOTES:

1. ALL EXISTING AC SURFACES SHALL BE SAWCUT ONE FOOT MINIMUM INSIDE THE EDGE OF PAVEMENT OR AS SHOWING ON THE PLANS TO A NEAT, STRAIGHT LINE AND REMOVED. THE EXPOSED EDGE SHALL BE SEALED WITH EMULSION PRIOR TO PAVING. THE EXPOSED BASE MATERIAL SHALL BE GRADED, RECOMPACTED, AND RESEALED PRIOR TO PAVING.

2. ASPHALT CONCRETE SHALL BE TYPE A, 1/2" MAXIMUM MEDIUM GRADING AND SHALL CONFORM TO THE CALTRANS SPECIFICATIONS FOR HMA (TYPE A).

3. AGGREGATE BASE SHALL BE CLASS 2, 3/4" MAXIMUM GRADING. AGGREGATE BASE SHALL CONFORM TO THE CALTRANS SPECIFICATIONS.

FUGITIVE DUST CONTROL:

1. THE CONTRACTOR IS TO MAINTAIN ADEQUATE DUST CONTROL PER SECTION 10, CALTRANS SPECIFICATIONS, AND UTILIZE DUST CONTROL MITIGATION APPROVED BY THE AIR POLLUTION CONTROL DISTRICT (A.P.C.D.). PARTICULATE CONTROL MEASURES SHALL ALSO BE USED THROUGHOUT THE CONSTRUCTION PHASE OF THIS PROJECT.

2. THE CONTRACTOR SHALL FOLLOW THE GUIDELINES OUTLINED IN THE "FUGITIVE DUST CONTROL" HANDBOOK AVAILABLE FROM A.P.C.D.

3. THE CONTRACTOR SHALL APPLY WATER TO ALL DISTURBED AREAS FOR THE ALLEVIATION OR PREVENTION OF DUST NUISANCE.

4. DUST PRODUCING CONSTRUCTION ACTIVITIES SHALL BE SUSPENDED DURING PERIODS OF HIGH WINDS (GUSTS EXCEEDING 25 MPH).

5. CONSTRUCTION VEHICLES AND EQUIPMENT SHALL BE RESTRICTED TO TRAVEL ALONG WELL WATERED CONSTRUCTION ROUTES AND SHALL BE LIMITED TO A MAXIMUM SPEED OF 15 MPH ON NON-PAVED CONSTRUCTION SITES.

6. THE CONTRACTOR SHALL USE TARPAULINS OR OTHER EFFECTIVE COVERS FOR HAUL TRUCKS WHICH TRAVELS IN PUBLIC STREETS.

7. EXISTING STREETS AND PAVED ROADS SHALL BE REGULARLY SWEPT AS FAR AS NECESSARY TO ENSURE THAT NOT SILT, DEBRIS OR POLLUTANT ARE CARRIED OVER TO ADJACENT PUBLIC THOROUGHFARES. DO NOT WASH DOWN STREETS WITH WATER UNTIL DIRT AND DUST HAS BEEN REMOVED BY DRY SWEEPING. THIS IS TO PREVENT CONTAMINATION OF WATERWAY WITH SEDIMENT.

8. ALL CONSTRUCTION EQUIPMENT SHALL BE CLEANED REGULARLY AND KEPT PROPERLY TUNED TO MINIMIZE THE AMOUNT OF DUST AND POLLUTANTS EMITTED INTO THE AIR.

TRENCH EXCAVATION AND BACKFILL NOTES:

1. UNLESS OTHERWISE APPROVED, MINIMUM COVERAGE FROM TOP OF PIPE TO FINISH GRADE SHALL BE AS FOLLOWS:

SEWER	36 IN.
WATER	30 IN.
CULVERTS	18 IN.
STORM DRAINS	18 IN.
OTHER UTILITIES	30 IN.

2. IN WET OR ROCKY MATERIAL, THE DEPTH OF TRENCH BEDDING SHALL BE INCREASED TO THE LARGER OF EITHER 6 IN. OR 1/4 DIA.

3. FOR CULVERTS/STORM DRAINS, THE MINIMUM DISTANCE BETWEEN THE SIDE OF THE TRENCH AND THE SIDE OF THE PIPE SHALL BE 12 IN.

4. MINIMUM COMPACTION REQUIREMENTS (SEE SECTION 19-4.04 OF THE PLACER COUNTY GENERAL SPECIFICATIONS).

   A. WITHIN ROADWAY PRISM-

      BEDDING/INITIAL BACKFILL

SUBGRADE	95%
INTERMEDIATE BACKFILL	92%

   B. OUTSIDE ROADWAY PRISM-

BEDDING/INITIAL BACKFILL	90%
INTERMEDIATE BACKFILL	90%

TRENCH EXCAVATION AND BACKFILL NOTES (CONT.):

5. IN AREAS WITH MINIMUM COVER, INTERMEDIATE BACKFILL SHALL BE CLASS 2 AGGREGATE BASE.

6. IN AREAS OF NATURAL VEGETATION OR LANDSCAPING, REMOVE TOP 12 IN. OF MATERIAL, STOCKPILE & REPLACE IN A MOUND PER PLATE 431, TYPE D AND PLATE 432, TYPE D.

7. ALL LANDSCAPING CONDUITS WITHIN THE ROADWAY PRISM AND/OR TRAFFIC AREAS MUST HAVE A MINIMUM OF 30 INCHES OVER. MINIMUM COVER WITHIN COUNTY R/W BUT OUTSIDE THE ROADWAY AND TRAFFIC AREAS SHALL BE AS FOLLOWS:

LOW VOLTAGE ELECTRICAL CONDUITS	24 IN. MIN
PRESSURIZED WATERLINES	24 IN. MIN
NONPRESSURIZED (DISCHARGED) LATERALS	12 IN. MIN

8. COMPACTION TESTING WITHIN THE PIPE ZONE (BOTTOM OF TRENCH TO 12 IN. ABOVE CONDUIT(S)) SHALL BE PERFORMED BY TESTING LAB AS APPROVED BY THE CITY.

9. SHOVEL SLICE BEDDING MATERIAL UNIFORMLY UNDER PIPE IN HAUNCH AREA. SHOVEL SLICING SHALL BE COMPLETED BEFORE THE BEDDING IS BROUGHT UP TO THE PIPE SPRINGLINE AND PREFERABLY WHEN IT IS NO HIGHER THAN THE QUARTER POINT OF THE PIPE.

CITY OF COLFAX NOTES:

1. THE CONTRACTOR SHALL NOT BEGIN ANY WORK SHOWN ON THESE PLANS UNTIL THE CITY ENGINEER'S SIGNATURE OF APPROVAL IS AFFIXED HEREON AND ALL APPLICABLE PERMITS HAVE BEEN OBTAINED.

2. ALL MATERIALS, METHODS, AND WORKMANSHIP SHALL CONFORM TO THE SPECIFICATION OF THE AGENCIES INVOLVED AND ALL WORK IS SUBJECT THE APPROVAL OF THEIR DIRECTOR OR AUTHORIZED REPRESENTATIVE.

3. THE CONTRACTOR SHALL NOTIFY THE CITY OF COLFAX'S PUBLIC SERVICES INSPECTORS MON.-FRI. 8:00 A.M. TO 4:00 P.M. AT (530) 346-2313 FOR A PRECONSTRUCTION MEETING 48 HOURS IN ADVANCE OF STARTING ANY CONSTRUCTION ACTIVITIES. THE CITY REQUIRES AT LEAST 48-HOURS PRIOR TO ANY CONSTRUCTION REQUESTS FOR INSPECTION OF PUBLIC FACILITIES. THEREFORE, NOTICE SHALL BE GIVEN 48-HOURS IN ADVANCE AND BE PERFORMED BY THE AGENCY'S DESIGNATED AGENT.

4. THE CONTRACTOR SHALL OBTAIN ALL NECESSARY ENCROACHMENT PERMITS AND SHALL POSSESS APPROVED PLANS PRIOR TO BEGINNING OF CONSTRUCTION. A SET OF SIGNED AND APPROVED PLANS ARE TO BE ON THE JOB SITE AT ALL TIMES.

5. THE CONTRACTOR SHALL MAINTAIN THE EXISTING PUBLIC AND PRIVATE IMPROVEMENT WITHIN THE WORK AREA AND SHALL ADEQUATELY BARRICADE THE PROJECT SITE TO KEEP THE GENERAL PUBLIC FROM THE SITE. ANY IMPROVEMENTS DAMAGED DURING CONSTRUCTION SHALL BE REPLACED BY CONTRACTOR.

EARTHWORK AND GRADING:

1. CONTRACTOR SHALL APPLY EROSION CONTROL HYDROSEEDING TO ALL GRADED OR DISTURBED SOILS WITHIN THE WORK AREA AFTER COMPLETION OF IMPROVEMENTS OR AS SOON AS PRACTICAL AFTER GRADING TO REDUCE DUST AND EROSION POTENTIAL. STRAW OR HYDROMULCHING SHALL BE COMBINED WITH THE SEEDING ON SLOPES EQUAL TO OR GREATER THAN 10:1 AND PLACED PRIOR TO COMPLETION OF PROJECT IF DEEMED NECESSARY FOR CONTROLLING SOIL EROSION.

2. THE CONTRACTOR SHALL DO THE FOLLOWING IF GRADING AND CLEARING IMPROVEMENTS ARE INCOMPLETE BY OCTOBER 1ST:
   - INSTALL EROSION PROTECTION ON SLOPES 10:1 OR STEEPER AND SWALES WITH SLOPES 2% OR GREATER
   - PREVENT SEDIMENT FROM LEAVING THE PROJECT AREA
   - PREVENT SEDIMENTATION IN EXISTING STORM DRAIN SYSTEM AND CLEAN PIPES AS PER SPECIFICATION SS62
   - SEAL OFF ALL SANITARY SEWER CONNECTIONS TO EXISTING SYSTEMS

   THE CONTRACTOR SHALL MAINTAIN WINTERIZATION FACILITIES AT ALL TIMES UNTIL THE CITY ACCEPTS THE ROAD IMPROVEMENTS

3. THOSE ENGAGED IN CONSTRUCTION ACTIVITY SHALL COMPLY WITH THE CITY OF COLFAX CONSTRUCTION NOISE COMPATIBILITY GUIDELINES, INCLUDING RESTRICTING CONSTRUCTION NOISE GENERATING ACTIVITIES WITHIN OR NEAR RESIDENTIAL AREAS TO BETWEEN 7:00 AM AND 7:00 PM ON WEEKDAYS AND 8:00 AM AND 7:00 PM ON THE WEEKENDS TO THE SATISFACTION OF THE PUBLIC SERVICES DIRECTOR OR BUILDING OFFICIAL.

STRIPING:

1. ALL EXISTING PAVEMENT MARKINGS TO BE REMOVED SHALL BE REMOVED BY GRINDING, AND A SURFACE TREATMENT MAY BE REQUIRED BY THE CITY.

2. ALL PAVEMENT MARKINGS SHALL BE THERMOPLASTIC AND ARE TO CONFORM TO THE MOST RECENT EDITION OF THE CALTRANS STANDARD SPECIFICATIONS AND PLANS.

DETAIL AND SECTION CALLOUTS

SECTION DESIGNATION:

SECTION DESIGNATIONS USE LETTERS

ON DRAWING WHERE SECTION IS TAKEN:

SECTION DESIGNATION — A
DRAWING NUMBER WHERE SHOWN — –

ON DRAWING WHERE SECTION IS SHOWN:

SECTION A
SCALE: 1/2"=1'-0"
SECTION DESIGNATION
DRAWING NUMBER WHERE TAKEN –

DRAWING NUMBER SHOWN AS " - " IF TAKEN & SHOWN ON SAME SHEET.

DETAIL DESIGNATION:

DETAIL DESIGNATIONS USE NUMBERS

ON DRAWING WHERE SECTION IS TAKEN:

DETAIL DESIGNATION — 1
DRAWING NUMBER WHERE SHOWN — –

ON DRAWING WHERE SECTION IS SHOWN:

DETAIL 1
SCALE: NTS
DETAIL DESIGNATION
DRAWING NUMBER WHERE TAKEN –

DRAWING NUMBER SHOWN AS " - " IF TAKEN & SHOWN ON SAME SHEET.

ABBREVIATIONS:

AC	ASPHALT CONCRETE	GB	GRADE BREAK	S	SLOPE
ARV	AIR RELEASE VALVE	GR	GRATE	SD	STORM DRAIN
BC	BEGIN CURVE	GV	GATE VALVE	SDDI	STORM DRAIN DROP INLET
B/C	BACK OF CURB	INV	INVERT	SDMH	STORM DRAIN MANHOLE
BO	BLOW-OFF VALVE	JP	JOINT POLE	SDN	STORM DRAIN NUMBER
B/W	BACK OF WALK	JT	JOINT UTILITY TRENCH	SFM	SEWER FORCE MAIN
BVC	BEGIN VERTICAL CURVE	L	LEFT, LENGTH	SL	SANITARY SEWER SERVICE LATERAL
CL	CENTERLINE	LF	LINEAL FEET		
CO	CLEANOUT	MAX	MAXIMUM	SS	SANITARY SEWER
DI	DROP INLET	MH	MANHOLE	SSN	SANITARY SEWER NUMBER
DWY	DRIVEWAY	MIN	MINIMUM	SSMH	SANITARY SEWER MANHOLE
EC	END CURVE	OFF	OFFSET		
EL	ELEVATION	OG	ORIGINAL GROUND	STA	STATION
EOP	EDGE OF PAVEMENT	OH	OVERHEAD UTILITY	STD	STANDARD
EXIST,EX	EXISTING	PCC	POINT OF COMPOUND 1 CURVE	TBC	TOP BACK OF CURB
EXSSN	EXISTING SANITARY SEWER NUMBER	PCWA	PLACER COUNTY WATER AGENCY	TFC	TOP FACE OF CURB
				TYP	TYPICAL
F/C	FACE OF CURB	PL	PROPERTY LINE	W	WATER, WATER MAIN
FL	FLOWLINE	PRC	POINT OF REVERSE CURVE	WM	WATER METER
FG	FINISHED GRADE	R	RADIUS, RIGHT	WS	WATER SERVICE LATERAL
FH	FIRE HYDRANT	RL	LENGTH OF PIPE RESTRAINT	WV	WATER VALVE
G	GAS, GAS MAIN				

LEGEND

- ROADWAY CENTERLINE
- PROPERTY LINE
- W — WATERLINE
- S — SANITARY SEWER LINE
- SFM — SANITARY SEWER FORCE MAIN
- OHE — OVERHEAD ELECTRIC
- STORM DRAIN LINE
- UTILITY VAULTS
- SD — STORM DRAIN MANHOLE
- SS — SEWER MANHOLE
- FIRE HYDRANT
- WATER VALVE
- POWER POLE
- STREET LIGHT
- CURB AND GUTTER
- EDGE OF EXISTING PAVEMENT
- ARV — COMBINATION \ AIR VALVE

No.	Issue	Checked	Approved	Date

Author **PE** Drafting Check **SD** Project Manager **CR**
Designer **SD** Design Check **FG** Project Director **LW**

CITY OF COLFAX

Bar is one inch on original size sheet
0 1"

REGISTERED PROFESSIONAL ENGINEER — CASEY L. RAINES — No. C76713 — Exp. 12-31-22 — CIVIL — STATE OF CALIFORNIA

GHD Inc.
943 Reserve Drive, Suite 100
Roseville California 95678 USA
T 1 916 782 8688
www.ghd.com

Conditions of Use
This document and the ideas and designs incorporated herein, as an instrument of professional service, is the property of GHD. This document may only be used by GHD's client (and any other person who GHD has agreed can use this document) for the purpose for which it was prepared and must not be used by any other person or for any other purpose.

Client **CITY OF COLFAX**

Project **LIFT STATION 5 FORCE MAIN IMPROVEMENTS**

Project No. **11201706** Date **SEPTEMBER 2021** Scale **AS SHOWN**

Title **NOTES, LEGEND, AND ABBREVIATIONS**

Size **ARCH D**

Sheet No. **G2** Sheet 2 of 8

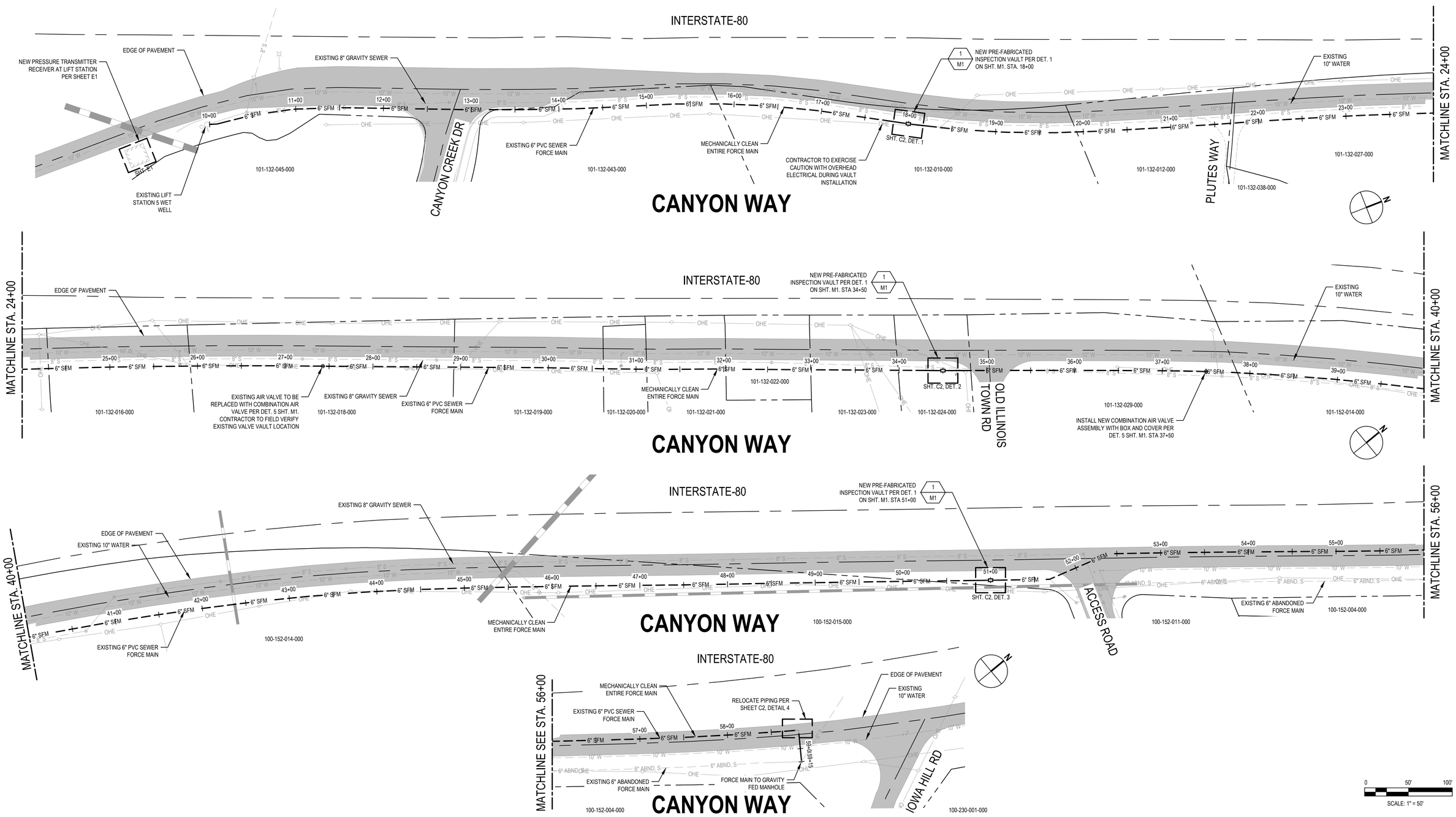

No.	Issue	Checked	Approved	Date

Author **PE** Drafting Check **SD** Project Manager **CR**

Designer **SD** Design Check **FG** Project Director **LW**

CITY OF COLFAX

Bar is one inch on original size sheet
0 1"

REGISTERED PROFESSIONAL ENGINEER CASEY L. RAINES No. C74TB Exp. 12-31-22 CIVIL STATE OF CALIFORNIA

GHD Inc.
943 Reserve Drive, Suite 100
Roseville California 95678 USA
T 1 916 782 8688
www.ghd.com

Conditions of Use
This document and the ideas and designs incorporated herein, as an instrument of professional service, is the property of GHD. This document may only be used by GHD's client (and any other person who GHD has agreed can use this document) for the purpose for which it was prepared and must not be used by any other person or for any other purpose.

Client **CITY OF COLFAX**

Project **LIFT STATION 5 FORCE MAIN IMPROVEMENTS**

Project No. **11201706** Date **SEPTEMBER 2021** Scale **AS SHOWN**

Title **INSPECTION VAULT LOCATION PLAN**

Size **ARCH D**

Sheet No. **C1** Sheet **3 of 8**

Plot Date: 29 September 2021 - 4:03 PM Plotted By: Cody Cook Path and Filename: N:\US\Roseville\Projects\561\11201706\Digital_Design\LS 5 FM\Sheets\11201706-C1.dwg

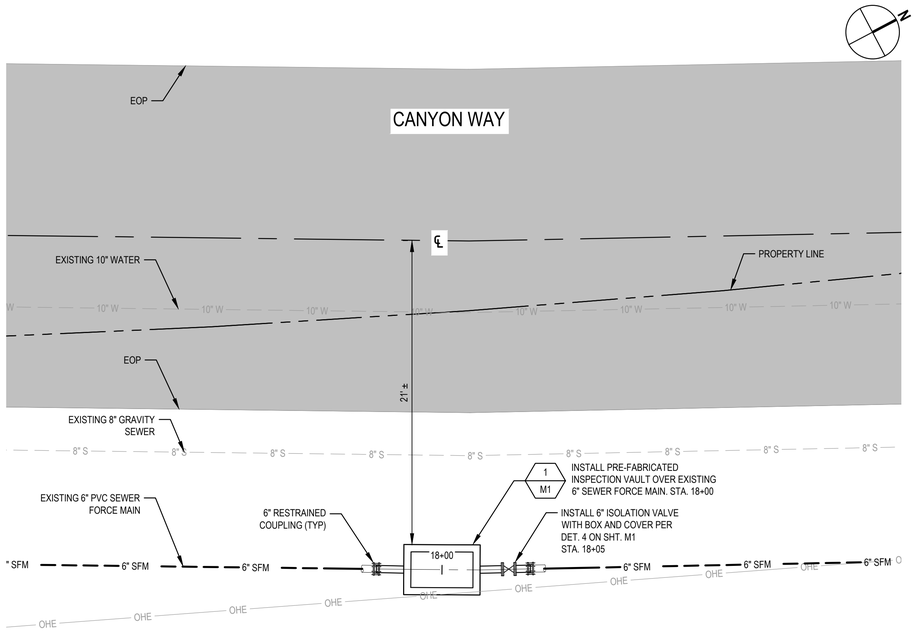

DETAIL 1 / -
1" = 5'

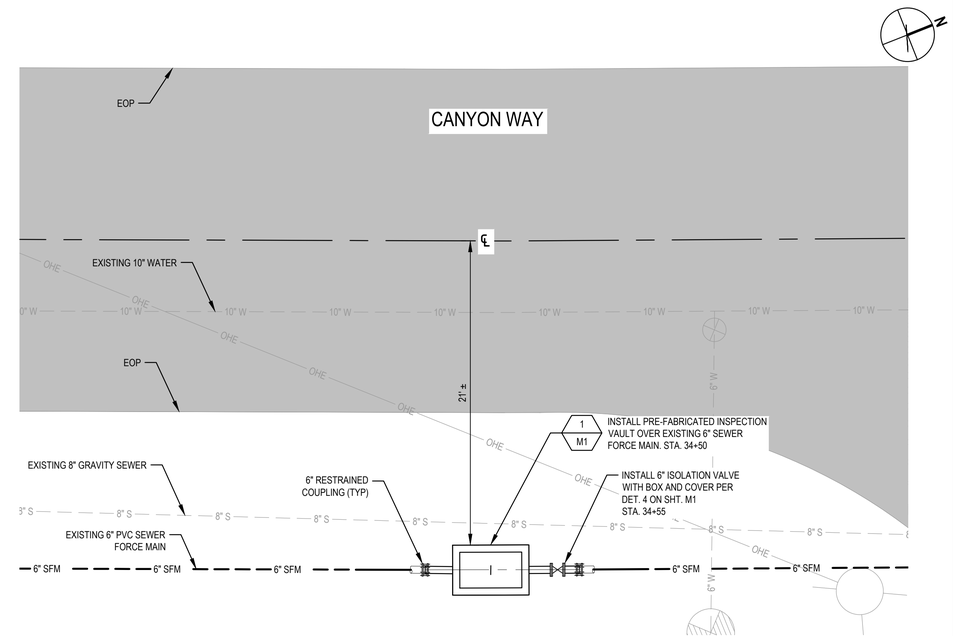

DETAIL 2 / -
1" = 5'

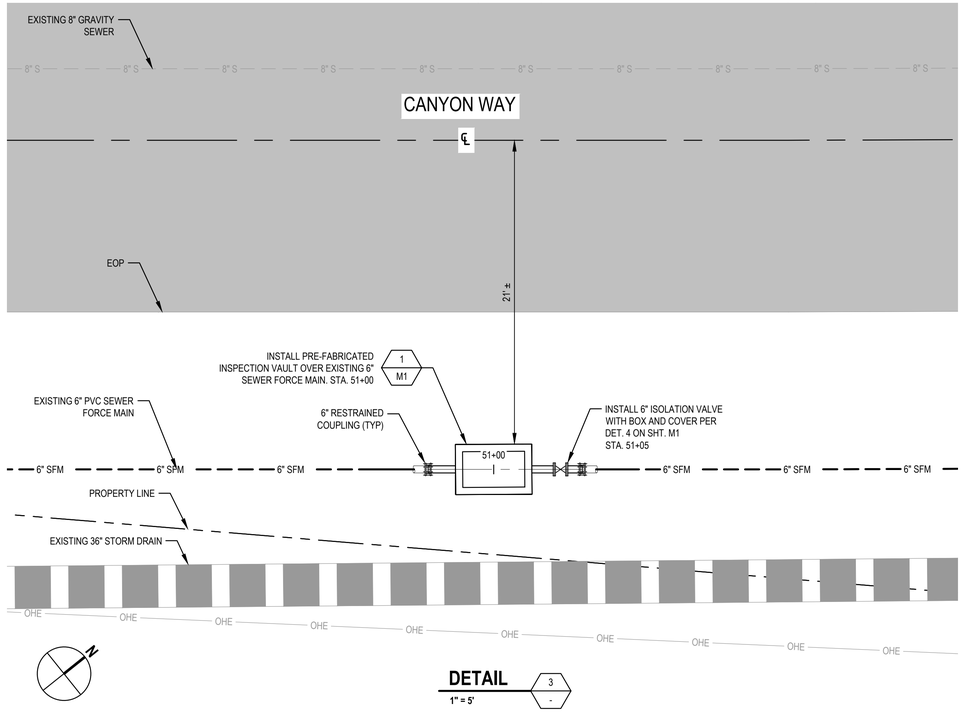

DETAIL 3 / -
1" = 5'

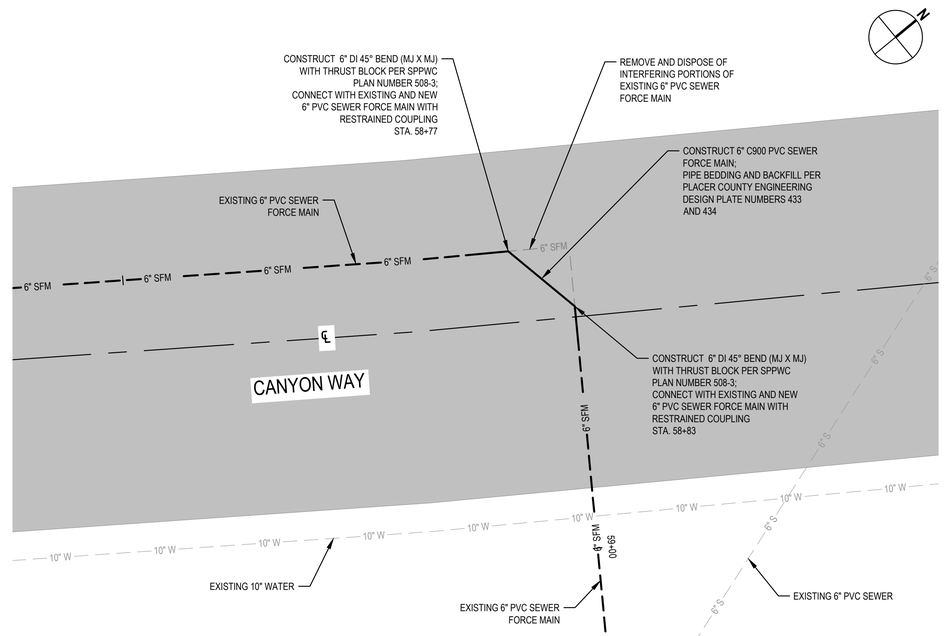

DETAIL 4 / -
1" = 5'

SHEET GENERAL NOTES

1. EXISTING SEWER FORCE MAIN TO BE MECHANICALLY CLEANED FOLLOWING VAULT INSTALLATION. CLEANING SHALL BE PER THE PROJECT SPECIFICATIONS.
2. ISOLATION VALVES ARE TO BE INSTALLED IN ACCORDANCE TO SPECIFICATION SECTION 15112.
3. 3'-6" x 5'-4" PRE-FABRICATED VAULT BY JENSEN PRECAST OR APPROVED EQUAL. VAULT COVER SHALL BE RATED FOR H-20. TRENCHING AND BACKFILL SHALL BE IN ACCORDANCE WITH DET. 3 ON SHT. M1.
4. CONTRACTOR TO VERIFY FIELD DIMENSIONS AND EXISTING UTILITIES PRIOR TO START OF CONSTRUCTION.

0 5' 10'

No.	Issue	Checked	Approved	Date

Author	PE	Drafting Check	SD
Designer	SD	Design Check	FG
Project Manager	CR		
Project Director	LW		

CITY OF COLFAX

Bar is one inch on original size sheet
0 1"

REGISTERED PROFESSIONAL ENGINEER CASEY L. RAINES No. C76713 Exp. 12-31-22 CIVIL STATE OF CALIFORNIA

GHD Inc.
943 Reserve Drive, Suite 100
Roseville California 95678 USA
T 1 916 782 8688
www.ghd.com

Conditions of Use
This document and the ideas and designs incorporated herein, as an instrument of professional service, is the property of GHD. This document may only be used by GHD's client (and any other person who GHD has agreed can use this document) for the purpose for which it was prepared and must not be used by any other person or for any other purpose.

Client **CITY OF COLFAX**

Project **LIFT STATION 5 FORCE MAIN IMPROVEMENTS**

Project No. **11201706** | Date **SEPTEMBER 2021** | Scale **AS SHOWN**

Title **EXISTING 6" FORCE MAIN AND INSPECTION VAULT DETAIL PLAN**

Size **ARCH D**

Sheet No. **C2** | Sheet **4 of 8**

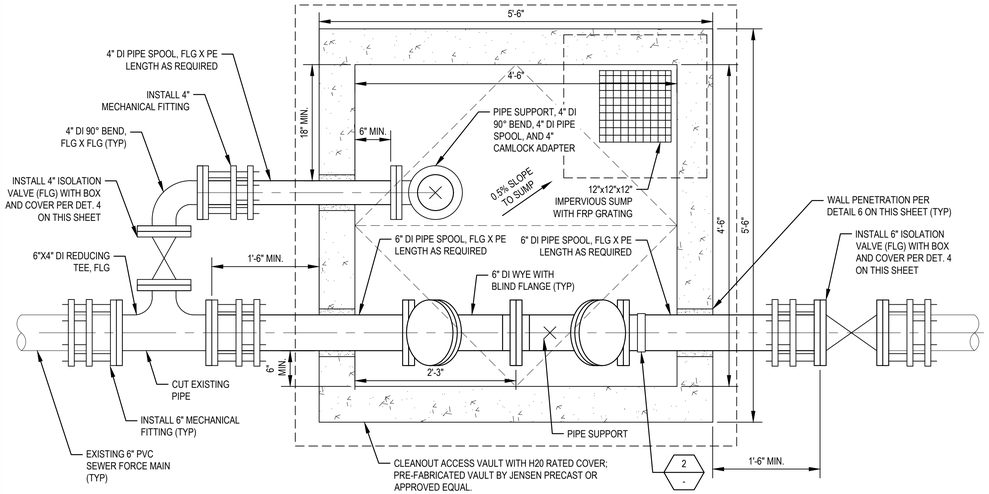

PLAN

1" = 1'-0"

NOTES:

1. CONTRACTOR SHALL POTHOLE AND VERTIFY THE DEPTH OF THE EXISTING SEWER FORCE MAIN AT THE PROPOSED VAULT LOCATIONS PRIOR TO VAULT FABRICATION.
2. TRENCHING AND BACKFILL SHALL BE IN ACCORDANCE WITH DET. 3 ON THIS SHEET.
3. FIBERGLASS GRATING SHALL BE ONE PIECE CONSTRUCTION, PULTRUDED FIBERGLASS GRATING BY GRATING PACIFIC, 3651 SAUSALITO STREET, LOS ALAMITOS, CA 90720, (800) 321-4314. PULTRUDED FIBERGLASS GRATING SHALL BE FIRE RETARDANT, 1-6015 1-1/2" DEEP "I" SERIES WITH VEFT RESIN. GRATING SHALL BE SUPPLIED WITH CONCAVE SKID-RESISTANT WALKING SURFACE. ALL CUT OR SANDED SURFACES SHALL BE SEALED WITH RESIN PRIOR TO INSTALLATION. CONTRACTOR SHALL COORDINATE WITH OWNER FOR FASTENING OF GRATING TO SUPPORTING STRUCTURE. DESIGN LOAD = 100 PSF.

VAULT DETAIL

1" = 1'-0"

1 / -

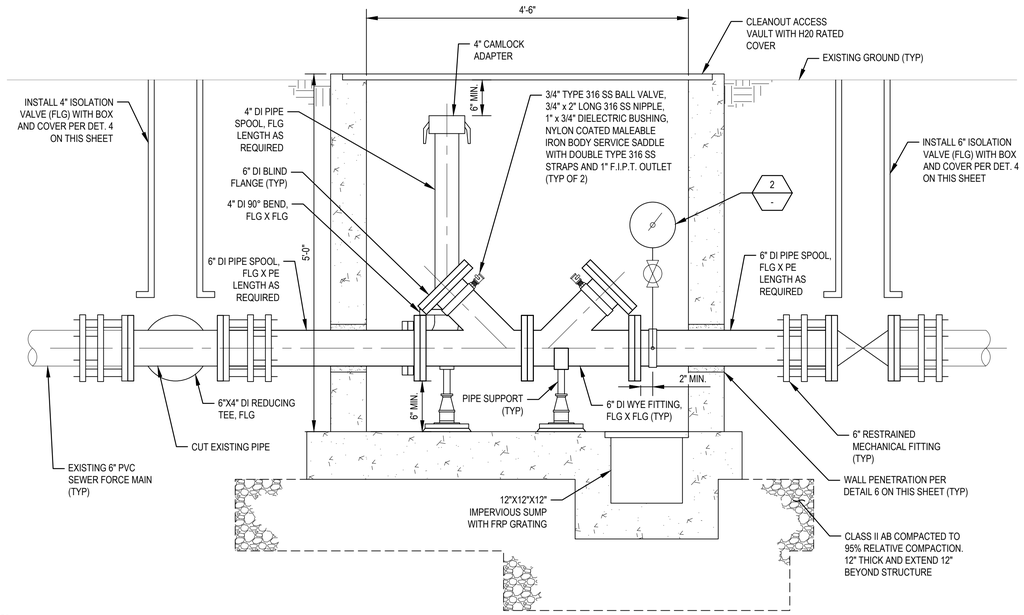

PROFILE

1" = 1'-0"

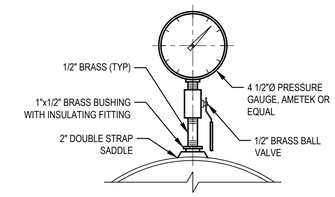

NOTES:

1. FOR S.S., GALV., AND PVC 2 1/2" AND SMALLER, USE A BUSHING IN A TEE.
2. MAX. INDICATING RANGE ON SCALE SHALL NOT EXCEED 2X OF NORMAL MAX OPERATION PRESSURE.
3. CONTRACTOR SHALL COORDINATE WITH CITY INSPECTOR TO POSITION GAUGE SO THAT IT DOES NOT INTERFERE WITH CCTV EQUIPMENT ACCESS.

PRESSURE GAUGE

NTS

2 / -

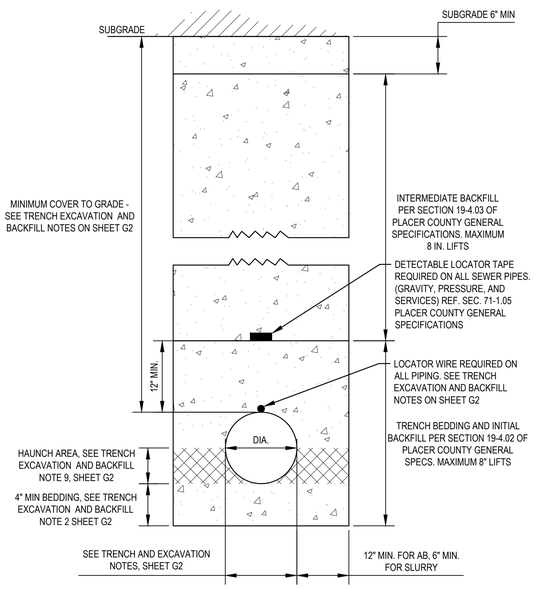

TRENCH EXCAVATION AND BACKFILL

NTS

3 / -

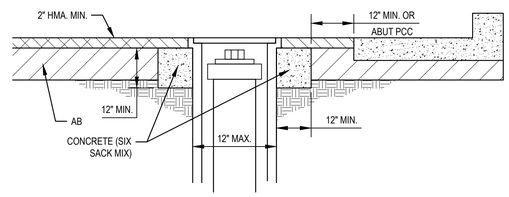

IN PAVEMENT

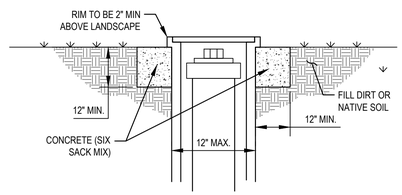

OUTSIDE PAVEMENT

NOTES:

1. TOP OF BOX IN PAVEMENT TO BE RECESSED BY 0.5 IN WHEN ABOVE 2,000 FT. ELEVATION.
2. BOXES TO BE RAISED AFTER FINAL PAVING.
3. BOX AND LID SHALL BE G05 WITH A METAL LID WITH SEWER WELDED ON THE LID.
4. BOXES GREATER THAN 12" OUTER DIAMETER WILL REQUIRE APPROVAL OF THE ENGINEER PRIOR TO INSTALLATION.
5. ALL RECTANGULAR UTILITY BOXES SHALL BE LOCATED OUTSIDE OF THE PAVEMENT AND NOT WITHIN TWO FEET OF A ROAD SIDE DITCH UNLESS APPROVED BY THE ENGINEER PRIOR TO INSTALLATION.
6. LOCATE OUTSIDE OF VEHICLE WHEEL PATH.
7. BOXES LOCATED OUTSIDE PAVEMENT SHALL BE 2" MINIMUM ABOVE THE LANDSCAPE MATERIAL.
8. METAL LIDS ARE REQUIRED ON ALL BOXES.

VALVE BOX DETAIL

NTS

4 / -

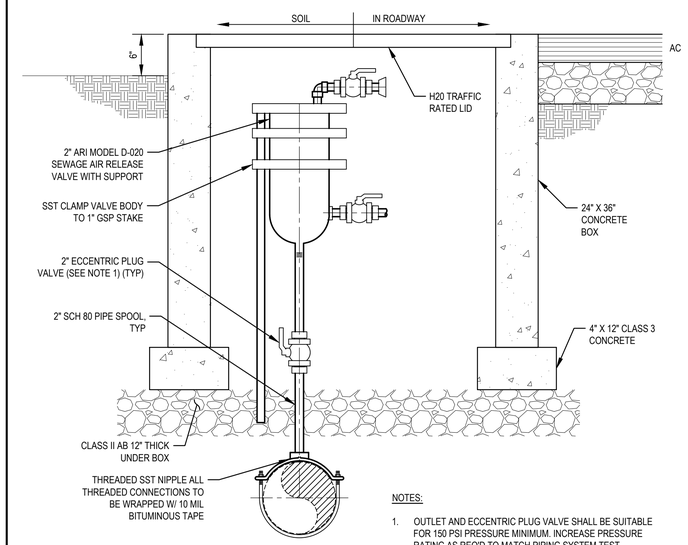

NOTES:

1. OUTLET AND ECCENTRIC PLUG VALVE SHALL BE SUITABLE FOR 150 PSI PRESSURE MINIMUM. INCREASE PRESSURE RATING AS REQ'D TO MATCH PIPING SYSTEM TEST PRESSURE

BURIED SEWAGE AIR/VACUUM RELEASE VALVE

NTS

5 / -

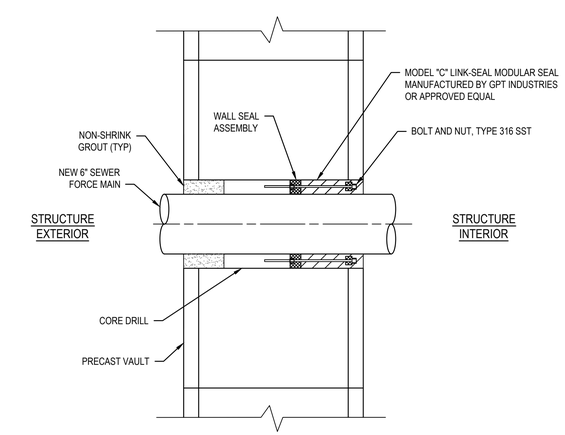

NOTES

1. INSIDE DIAMETER OF EACH WALL OPENING SHALL BE OF THE SIZE RECOMMENDED BY THE SEAL MANUFACTURER TO FIT THE PIPE OR CONDUIT AND TO ENSURE A WATER-TIGHT JOINT.
2. WALL SEAL ASSEMBLY SHALL BE OF THE MODULAR MECHANICAL TYPE, CONSISTING OF INTERLOCKING SYNTHETIC RUBBER LINKS SHAPED TO FILL THE ANNULAR SPACE BETWEEN THE PIPE AND THE WALL OPENING. A PRESSURE PLATE SHALL BE PROVIDED UNDER EACH BOLT HEAD AND NUT, WITH THE SEAL CONSTRUCTED TO PROVIDE ELECTRICAL INSULATION BETWEEN WALL AND PIPE. WALL SEAL ASSEMBLY SHALL BE LINK SEAL AS MANUFACTURED BY GPT INDUSTRIES OR APPROVED EQUAL. ALL HARDWARE SHALL BE STAINLESS STEEL, GRADE 316.

WALL PENETRATION

1" = 1'-0"

6 / -

No.	Issue	Checked	Approved	Date

Author **PE** Drafting Check **SD** Project Manager **CR**

Designer **SD** Design Check **FG** Project Director **LW**

CITY OF COLFAX

Bar is one inch on original size sheet

0 1"

REGISTERED PROFESSIONAL ENGINEER CASEY L. RAINES No. C76719 Exp. 12-31-22 CIVIL STATE OF CALIFORNIA

GHD Inc.
943 Reserve Drive, Suite 100
Roseville California 95678 USA
T 1 916 782 8688
www.ghd.com

Conditions of Use
This document and the ideas and designs incorporated herein, as an instrument of professional service, is the property of GHD. This document may only be used by GHD's client (and any other person who GHD has agreed can use this document) for the purpose for which it was prepared and must not be used by any other person or for any other purpose.

Client **CITY OF COLFAX**

Project **LIFT STATION 5 FORCE MAIN IMPROVEMENTS**

Project No. **11201706** Date **SEPTEMBER 2021** Scale **AS SHOWN**

Title **DETAILS**

Size **ARCH D**

Sheet No. **M1** Sheet 5 of 8

REVISION	DESCRIPTION	BY	APP	CITY	DATE

NEMA 4X AREA (1)

ENTIRE DRAWING

CLASS 1 DIV 2 AREA (1)

10' AROUND WET WELL HATCH UP TO 18" ABOVE GRADE

REV	PLAN DWG	CONDUIT	FROM	TO	CONDUIT QTY	CONDUIT SIZE	TYPE	GROUND WIRE	POWER QTY	POWER SIZE	CONTROL QTY	CONTROL SIZE	SIGNAL QTY	SIGNAL SIZE	REMARKS
	E500	A551	CONTROL PANEL	WET WELL VIA PB 500	1	1"	GRS-PVC	#12	-	-	-	-	1	#16TSPR	
	E501	C502	GENERATOR	ATS	1	1"	PVC-40	#12	-	-	6	#14	-		
	E501	C503	GENERATOR	FILL ALARM PANEL	1	1"	PVC-40	-	-	-	-	-	-	-	MFG CABLE
	E501	C504	GENERATOR	CONTROL PANEL	1	1"	PVC-40	#12	-	-	8	#14	-		
	E501	C505	GENERATOR	MOTORIZED LOUVER	1	1"	PVC-40	#12	2	#12	-	-	-	-	MFG CABLE
	E500	C511	MCC	DRY WELL PMP 511 VIA PB 500	1	1"	PVC-40	#12	-	-	6	#14	-	-	
	E500	C512	MCC	DRY WELL PMP 512 VIA PB500	1	1"	PVC-40	#12	-	-	6	#14	-	-	
	E500	C552	CONTROL PANEL	WET WELL VIA PB 500	1	1"	PVC-40	#12	-	-	4	#14	-	-	
	E501	C554	PB 500	LSHH5054	1	1"	PVC-40	#12	-	-	2	#14	-	-	FLOOD SWITCH, INSTALL PER A/E042
	E501	D500	CONTROL PANEL	ANTENNA	1	2"	GRS-PVC	-	-	-	-	-	1	COAX	
	E501	D501	CONTROL PANEL	J-BOX	1	1"	PVC-40	-	-	-	-	-	-	-	PULL ROPE
	E500	L504	LIGHTING PANEL	EXHAUST FAN	1	1"	PVC-40	#12	2	#12	-	-	-	-	
	E500	L505	LIGHTING PANEL	GENERATOR	1	1"	PVC-40	#12	4	#10	-	-	-	-	
	E500	L506	LIGHTING PANEL	DRY WELL VIA PB 500	1	1"	PVC-40	#12	4	#10	-	-	-	-	DRY WELL LIGHTS/RECEPT
	E500	L510	LIGHTING PANEL	EUH-5000	1	1"	PVC-40	#12	2	#10	-	-	-	-	
	E501	L516	LIGHTING PANEL	FILL STATION	1	1"	PVC-40	#12	2	#12	-	-	-	-	
	E500	P500	(N) UTILITY POLE	UTILITY METER	1	5"	PVC-40	-	-	-	-	-	-	-	PER UTILITY REQUIREMENTS/ENGINEERED DWG'S
	E501	P501	ATS	MCC	2	3"	PVC-40	#4	3	3/0	-	-	-	-	
	E501	P502	GENERATOR	ATS	2	3"	PVC-40	#4	3	3/0	-	-	-	-	
	E500	P511	MCC	DRY WELL PMP 511	1	2"	PVC-40	#4	3	1/0	-	-	-	-	
	E500	P512	MCC	DRY WELL PMP 512	1	2"	PVC-40	#4	3	1/0	-	-	-	-	
	E500	XA501	CONTROL PANEL	PB 500	1	1"	GRS-PVC	-	-	-	-	-	-	-	PULL ROPE
		C555	CONTROL PANEL	PB 500	EXISTING	EXISTING	EXISTING	#12			2	#12			
		C555	PB 500	PT 5055	1	3/4"	PVC-40	#12			2	#12			

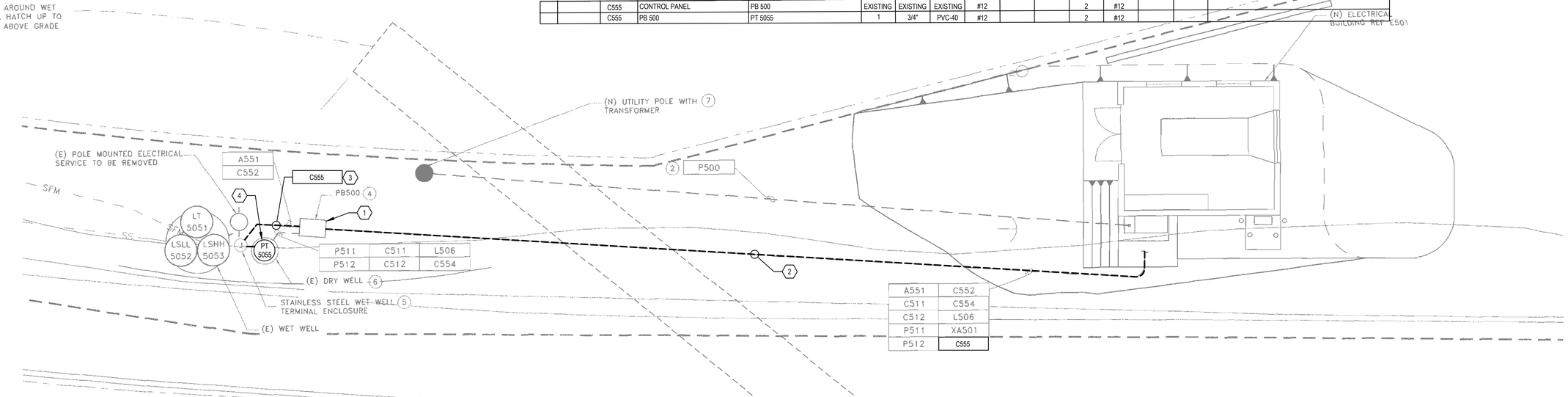

NOTES:

1. AREA CLASSIFICATION SHALL APPLY UNLESS SPECIFICALLY NOTED ON THE PLAN'S AND SPECIFICATIONS.
2. (N) UTILITY SECONDARY CONDUIT. CONTRACTOR TO INSTALL PER UTILITY ENGINEERED DRAWING.
3. (N) CONDUITS INSTALLED PER A/E41. INCLUDE AWG #2/0 BARE COPPER BOND WIRE FROM SYSTEM GROUND TO PUMP DRY WELL ENCLOSURE.
4. (N) 24"X30" PULL BOX, PB 500. INSTALL PER C/E41. NEW CONDUITS TO PENETRATE DRY WELL ABOVE GRADE USING CONDULETES. ALL CONDUITS IN IN DRY WELL TO BE GRS-PVC SIZED PER CONDUIT SCHEDULE AND MOUNTED ON STAINLESS STEEL UNISTRUT SECURED WITH STAINLESS STEEL HARDWARE. CONDUIT STUB UP PER D/E42.
5. 24"HX24"WX12"D MIN. INSTALL ISR'S & ISB PER P&ID IN SEPARATE NEMA 1 ENCLOSURE INSIDE SS JB. PROVIDE TERMINALS FOR MOTOR LEADS. MOUNT JB ON DOUBLE SIDED STAINLESS STEEL UNISTRUT MIN 18". PROVIDE GRS-PVC CONDUIT CHASES TO WET WELL ABOVE TOP OF WET WELL PROVIDE CONDUIT SEAL OFFS PER NEC.
6. CONNECT NEW CONDUITS TO (E) MOTOR AND LIGHTING DEVICES. USE FLEX FOR FINAL CONNECTIONS AS NECESSARY. DEMO (E) MOTOR CONTROLS AND DISTRIBUTION EQUIPMENT.
7. UTILITY POLE & TRANSFORMER INSTALLED BY UTILITY.

SHEET KEYNOTES

1. PROVIDE INTRINSICALLY SAFE RELAY IN JUNCTION BOX FOR PRESSURE TRANSMITTER.
2. USE EXISTING SPARE CONDUIT XA501 AND ROUTE (2) #12 AND (1) #12 GND FROM CP-LS-5 TO JUNCTION BOX. FIELD VERIFY SPARE 1" CONDUIT XA501.
3. PROVIDE 3/4" AND ROUTE (2) #12 AND (1) #12 GND FROM PB500 THROUGH THE JUNCTION BOX TO DRY WELL PRESSURE TRANSMITTER.
4. PROVIDE LB FITTING FOR DRY WELL CONNECTION FROM JUNCTION BOX TO PRESSURE TRANSMITTER.

No.	Issue	Checked	Approved	Date

Author JH	Drafting Check MM	Project Manager CR	
Designer JH	Design Check MM	Project Director LW	

CITY OF COLFAX

Bar is one inch on original size sheet
0 1"

REGISTERED PROFESSIONAL ENGINEER
MEHDI MARDI
No.E20033
ELECTRICAL
STATE OF CALIFORNIA

GHD Inc.
943 Reserve Drive, Suite 100
Roseville California 95678 USA
T 1 916 782 8688
www.ghd.com

Conditions of Use
This document and the ideas and designs incorporated herein, as an instrument of professional service, is the property of GHD. This document may only be used by GHD's client (and any other person who GHD has agreed can use this document) for the purpose for which it was prepared and must not be used by any other person or for any other purpose.

Client CITY OF COLFAX

Project LIFT STATION 5 FORCE MAIN IMPROVEMENTS

Title ELECTRICAL SITE PLAN

Size ARCH D

Project No.	Date	Scale	Sheet No.	Sheet
11201706	SEPTEMBER 2021	NTS	E1	6 of 8

Plot Date: 29 September 2021 - 4:05 PM Plotted By: Cody Cook Path and Filename: N:\US\Roseville\Projects\561\11201706\Digital_Design\LS 5 FM\Sheets\11201706-E1.dwg

SHEET KEYNOTES

1. PROVIDE INTRINSICALLY SAFE RELAY IN JUNCTION BOX.

CP-LS-5 CONTROL PANEL (1 / -)
NTS

JUNCTION BOX (2 / -)
NTS

DRY WELL (3 / -)
NTS

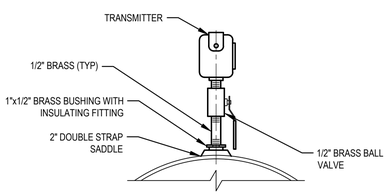

NOTES:

1. FOR S.S., GALV., AND PVC 2 1/2" AND SMALLER.
2. MAX. INDICATING RANGE ON SCALE SHALL NOT EXCEED 2X OF NORMAL MAX OPERATION PRESSURE.
3. ROSEMOUNT 3051S PRESSURE TRANSMITTER OR APPROVED EQUAL.

PRESSURE TRANSMITTER (4 / -)
NTS

No.	Issue	Checked	Approved	Date

Author	JH	Drafting Check	MM
Designer	JH	Design Check	MM
Project Manager	CR		
Project Director	LW		

CITY OF COLFAX

Bar is one inch on original size sheet
0 1"

REGISTERED PROFESSIONAL ENGINEER
MEHDI MARDI
No. E20033
ELECTRICAL
STATE OF CALIFORNIA

GHD Inc.
943 Reserve Drive, Suite 100
Roseville California 95678 USA
T 1 916 782 8688
www.ghd.com

Conditions of Use
This document and the ideas and designs incorporated herein, as an instrument of professional service, is the property of GHD. This document may only be used by GHD's client (and any other person who GHD has agreed can use this document) for the purpose for which it was prepared and must not be used by any other person or for any other purpose.

Client **CITY OF COLFAX**

Project **LIFT STATION 5 FORCE MAIN IMPROVEMENTS**

Title **ELECTRICAL DETAILS**

Project No.	Date	Scale
11201706	SEPTEMBER 2021	NTS

Size ARCH D

Sheet No. E2

Sheet 7 of 8

REVISION	DESCRIPTION	BY	APP	CITY	DATE

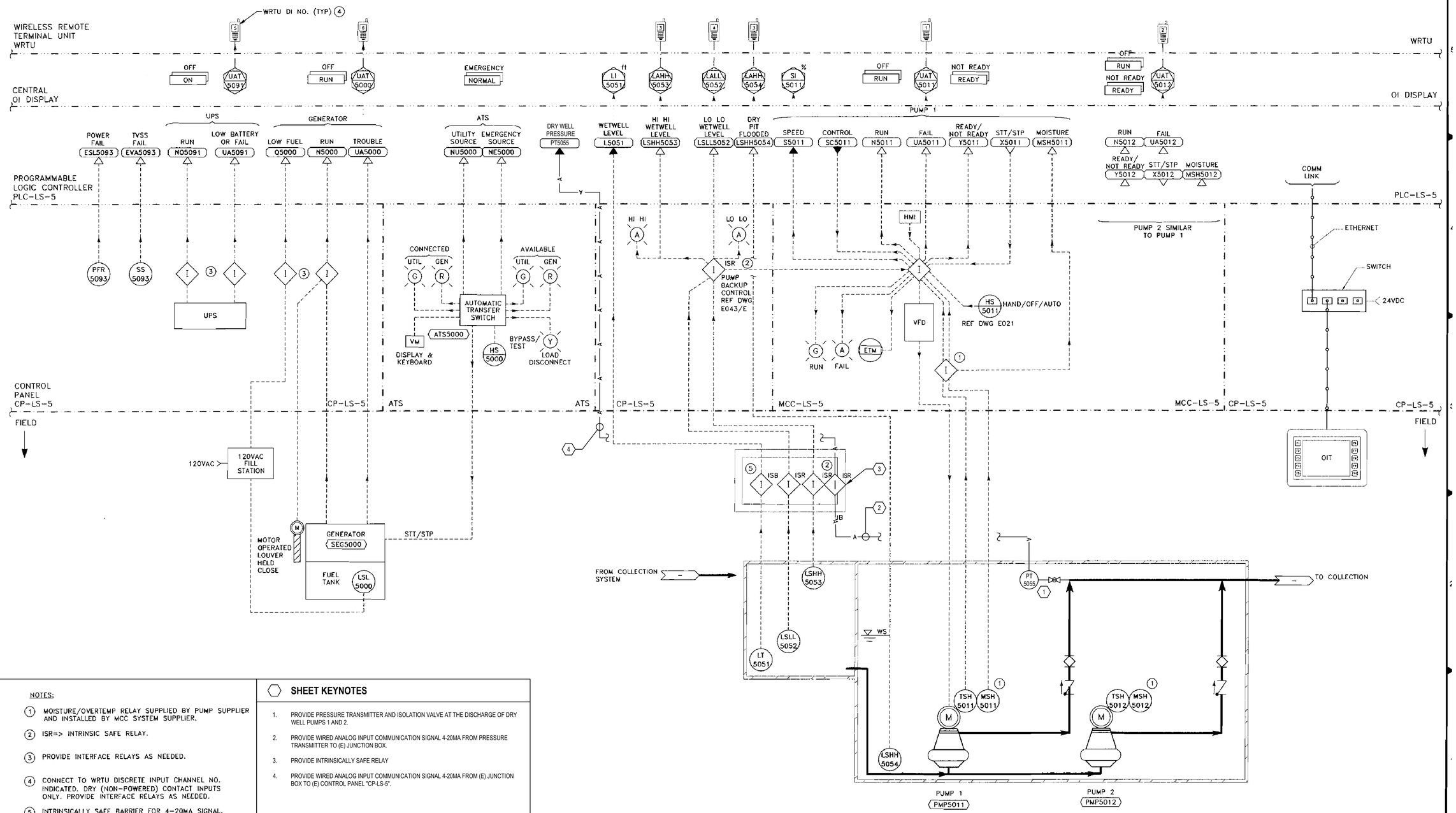

WET WELL/DRY-WELL

NOTES:

1. MOISTURE/OVERTEMP RELAY SUPPLIED BY PUMP SUPPLIER AND INSTALLED BY MCC SYSTEM SUPPLIER.
2. ISR=> INTRINSIC SAFE RELAY.
3. PROVIDE INTERFACE RELAYS AS NEEDED.
4. CONNECT TO WRTU DISCRETE INPUT CHANNEL NO. INDICATED. DRY (NON-POWERED) CONTACT INPUTS ONLY. PROVIDE INTERFACE RELAYS AS NEEDED.
5. INTRINSICALLY SAFE BARRIER FOR 4-20MA SIGNAL.

SHEET KEYNOTES

1. PROVIDE PRESSURE TRANSMITTER AND ISOLATION VALVE AT THE DISCHARGE OF DRY WELL PUMPS 1 AND 2.
2. PROVIDE WIRED ANALOG INPUT COMMUNICATION SIGNAL 4-20MA FROM PRESSURE TRANSMITTER TO (E) JUNCTION BOX.
3. PROVIDE INTRINSICALLY SAFE RELAY
4. PROVIDE WIRED ANALOG INPUT COMMUNICATION SIGNAL 4-20MA FROM (E) JUNCTION BOX TO (E) CONTROL PANEL "CP-LS-5".

No.	Issue	Checked	Approved	Date

Author JH	Drafting Check MM	Project Manager CR	
Designer JH	Design Check MM	Project Director LW	

CITY OF COLFAX

Bar is one inch on original size sheet
0 1"

REGISTERED PROFESSIONAL ENGINEER — ERDI MARDI — No. E20033 — ELECTRICAL — STATE OF CALIFORNIA

GHD Inc.
943 Reserve Drive, Suite 100
Roseville California 95678 USA
T 1 916 782 8688
www.ghd.com

Conditions of Use
This document and the ideas and designs incorporated herein, as an instrument of professional service, is the property of GHD. This document may only be used by GHD's client (and any other person who GHD has agreed can use this document) for the purpose for which it was prepared and must not be used by any other person or for any other purpose.

Client **CITY OF COLFAX**

Project **LIFT STATION 5 FORCE MAIN IMPROVEMENTS**

Title **LIFT STATION 5 P&ID**

Project No.	Date	Scale
11201706	SEPTEMBER 2021	AS SHOWN

Size ARCH D

Sheet No. I1

Sheet 8 of 8